Operating instructions for dishwashers

To avoid the risk of accidents or damage to the appliance, it is **essential** to read these instructions as well as the installation plan before it is installed and used for the first time.

en-AU, NZ HG05 M.-Nr. 10 601 520

Contents

Guide to the appliance 6
Guide to the appliance 6
Control panel 7
Display 8

Warning and Safety instructions 9

Caring for the environment 19
Energy-saving dishwashing 20
EcoFeedback consumption indicator 21

Before using for the first time 22
Opening the door 22
Closing the door 22
Safety lock 22
Basic settings 23
Before using the appliance for the first time, you require: 25
Dishwasher salt 25
    Filling the salt reservoir 26
    Add salt reminder 27
Rinse aid 28
    Adding rinse aid 28
    Add rinse aid reminder 29

Loading the dishwasher 30
Notes 30
FlexAssist 32
Upper basket 32
    Adjusting the upper basket 35
Lower basket 36
Cutlery 39
    3D cutlery tray + (depending on model) 39
    Cutlery basket (depending on model) 41
Loading examples 42
    Dishwashers with cutlery tray 42
    Dishwashers with cutlery basket 44

Comparison tests 46
Standard height with cutlery tray 46
XXL height with cutlery tray 49

Operation 52
Detergent 52
    Adding detergent 54

Contents

Switching on 55
Selecting a programme 55
Starting the programme 56
Time display 56
Energy management 57
At the end of the programme 57
Switching off 58
Unloading the dishwasher 58
Interrupting a programme 59
Changing a programme 59

Programme options 60
Options 60
FlexiTimer 61
DetergentAgent 65

Programme chart 66
Further programmes ⧉ 70

Cleaning and care 71
Cleaning the wash cabinet 71
Cleaning the door and the door seal 71
Cleaning the door front 72
Checking the filters in the wash cabinet 73
Cleaning the filters 73
Cleaning the spray arms 75

Problem solving guide 76
Technical problems 76
Water inlet fault 78
Water drainage fault 79
General problems 80
Noises 82
Unsatisfactory washing result 83

Maintenance 86
Cleaning the water inlet filter 86
Cleaning the drain pump and non-return valve 87

After sales service 88
Repairs 88
Warranty 88

Optional accessories 89

Contents

Electrical connection 91

Water connection 92
The Miele Waterproof system 92
Connection to the water supply 92
Drainage 94

Technical data 95
Technical data 95

Settings menu 96
Opening the Settings menu 96
Language ⚑ 96
Time of day 97
Water hardness 98
Rinse aid 99
Consumption (EcoFeedback) 99
EcoStart 100
Networking 102
Miele@home 102
Soak 106
Pre-wash 106
Brightness 106
Switching off the refill reminders 106
Check filters 107
Automatic 107
AutoOpen 107
BrilliantLight 107
Software version 108
Showroom programme 108
Factory default settings 108
Closing the Settings menu 108

Guide to the appliance

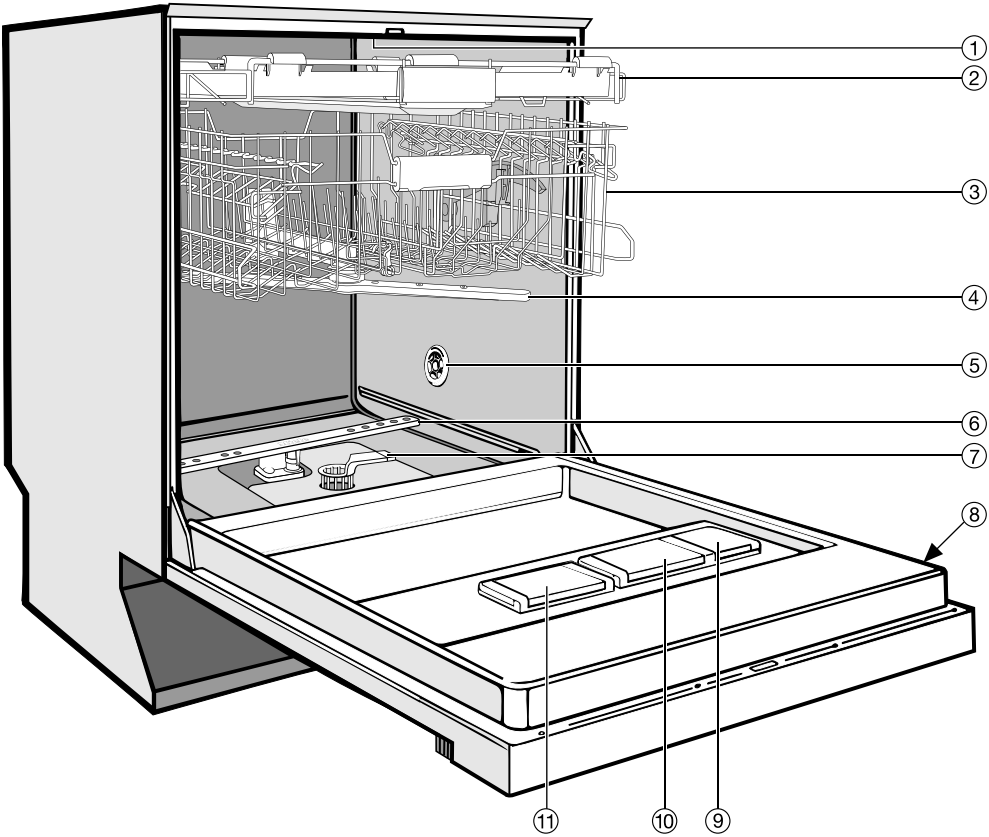

① Upper spray arm (not visible)

② Cutlery tray (depending on model)

③ Upper basket

④ Middle spray arm

⑤ Heat exchanger return (depending on model)

⑥ Lower spray arm

⑦ Filter combination

⑧ Data plate

⑨ Rinse aid reservoir

⑩ Dual compartment detergent dispenser

⑪ Salt reservoir

Control panel

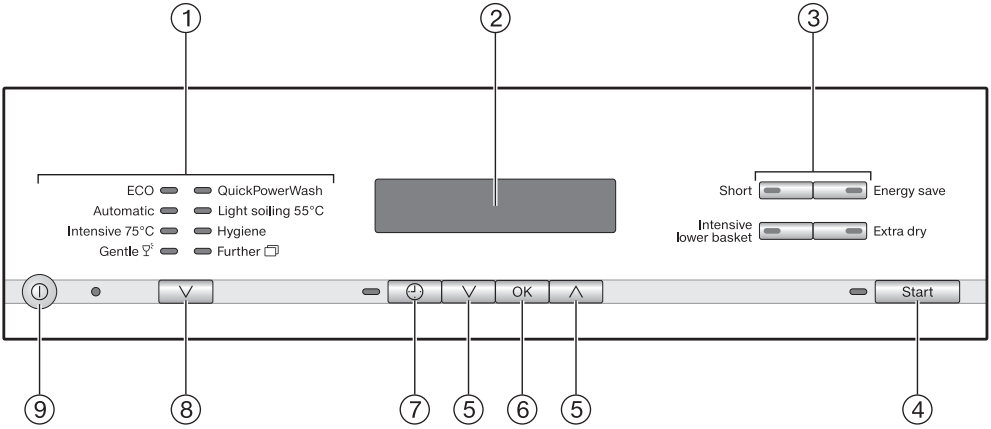

① Programme selection

② Display

③ Option buttons

④ *Start* button with indicator light

⑤ Arrow buttons ∨∧

⑥ *OK* button

⑦ button (FlexiTimer) with indicator light

⑧ Programme selector button ∨

⑨ On/Off button

These operating instructions apply to several different dishwasher models with different heights.
The specific dishwasher models are referred to as follows:
Standard = 80.5 cm high dishwashers (integrated)
and 84.5 cm high dishwashers (freestanding)
XXL = 84.5 cm high dishwashers (integrated)

Display

General

The display is used to select or set the following:

- the programme
- the FlexiTimer (Delay start)
- the Settings menu

The display can show the following:

- the current time of day
- the stage the programme is at
- the estimated time left for the programme to run
- the energy and water consumption (EcoFeedback)
- any relevant fault messages and information

To save energy, the dishwasher switches off after a few minutes if you do not press any buttons during this time.
To switch the dishwasher back on again, press the ⏻ button.

Settings menu

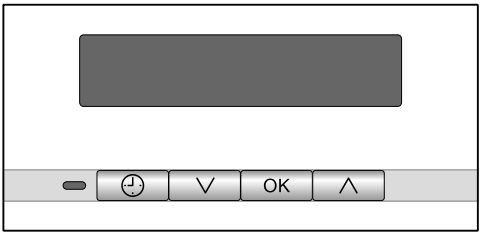

The Settings menu is used to alter the dishwasher's electronics to suit different requirements. You access the Settings menu by pressing a specific button combination (see "Settings menu").

The arrows in the display indicate further options. You can use the ∨∧ arrow buttons underneath the display, as appropriate, to select these further options.

The *OK* button is used to confirm a message or setting and also to move to the next menu or another level.

The option which is selected will have a tick ✓ next to it.

To exit a sub-menu, use the ∨∧ arrow buttons to select the Back ⮌ option in the display and confirm your selection with *OK*.
If you do not press any of the buttons for several seconds, the display will return to the previous level. You may need to enter your settings again.

This dishwasher complies with current safety requirements. Inappropriate use can, however, lead to personal injury and damage to property.

To avoid the risk of accidents and damage to the dishwasher, please read the installation plan and the operating instructions carefully before it is installed and used for the first time. They contain important information on its installation, safety, use and maintenance.

Keep the installation plan and the operating instructions in a safe place and pass them on to any future owner.

Miele cannot be held liable for damage caused by non-compliance with this information.

Correct application

▶ This appliance is designed for domestic use and for use in similar environments by guests in hotel or motel rooms, bed & breakfasts and other typical living quarters. This does not include common/ shared facilities or commercial facilities within hotels, motels or bed & breakfasts.

▶ This dishwasher is not suitable for outdoor use.

▶ It must only be used as specified in these operating instructions for cleaning domestic crockery and cutlery. Any other usage is not supported by the manufacturer and could be dangerous.

▶ This appliance is not intended for use by persons (including children) with reduced physical, sensory or mental capabilities, or lack of experience and knowledge, unless they have been given supervision or instruction concerning its use by a person responsible for their safety, and are able to recognise the dangers of misuse.

Safety with children

▶ Young children must not be allowed to use this appliance.

▶ Older children may only use the appliance when its operation has been clearly explained to them and they are able to use it safely, recognising the dangers of misuse.

▶ Cleaning work may only be carried out by older children under the supervision of an adult.

▶ Children should be supervised to ensure that they do not play with the appliance. Keep small children away from the appliance at all times to avoid the risk of injury. There is the risk that children may lock themselves in the dishwasher.

▶ If the automatic door opening mechanism (depending on model) is active, keep young children away from the area in which the door opens. Danger of injury in the unlikely event of a fault with the opening mechanism.

▶ Danger of suffocation! Children may be able to wrap themselves in packing material or pull it over their heads with the risk of suffocation. Keep children away from any packing material.

▶ Keep detergent and other household agents out of the reach of children at all times. Some dishwasher detergents are strongly alkaline and contain irritants and corrosive ingredients. They can be extremely dangerous if swallowed, and can cause burning in the mouth, nose and throat, or inhibit breathing. Avoid contact with the skin and eyes. Keep children away from the dishwasher when the door is open. There could still be detergent residues in the cabinet or dispenser. Check that the dispenser is empty after the completion of a programme. Seek medical advice immediately if your child has swallowed or inhaled detergent, e.g. Poisons Information Centre (Australia) or National Poisons Centre (NZ).

Technical safety

▶ Repairs and other work by unqualified persons could be dangerous. Installation, maintenance work and repairs to electrical appliances must only be carried out by a Miele approved service technician.

▶ Before installation, check the dishwasher for visible signs of damage. Under no circumstances should you use a damaged dishwasher. A damaged dishwasher could be dangerous.

▶ The electrical safety of this appliance can only be guaranteed when continuity is complete between it and an effective earthing system. It is most important that this basic safety requirement is present and regularly tested and, where there is any doubt, the electrical system in the house should be checked by a qualified electrician.
Miele cannot be held liable for the consequences of an inadequate earthing system (e.g. electric shock).

▶ Reliable and safe operation of this dishwasher can only be assured if it has been connected to the mains electricity supply.

▶ The dishwasher must only be plugged into the electricity supply via a suitable switched socket. The electrical socket must be easily accessible after the dishwasher is installed so that it can be disconnected from the electricity supply at any time.

▶ There must be no electrical sockets behind the dishwasher. Danger of overheating and fire risk if the dishwasher were to be pushed up against a plug.

▶ The dishwasher must not be installed under a cooktop. The high radiant temperatures which are sometimes generated by a cooktop could damage the dishwasher. For the same reason, it should not be installed next to open fires or other appliances which give off heat, such as heaters etc.

▶ To avoid the risk of damage to the dishwasher, make sure that the connection data on the data plate (fuse rating, voltage and frequency) matches the mains electricity supply before connecting the dishwasher to the mains. Consult a qualified electrician if in any doubt.

▶ Do not connect the dishwasher to the mains supply until it has been fully installed and any adjustment has been made to the door springs.

▶ The dishwasher may only be operated if the door opening mechanism is working correctly. Otherwise there could be a risk of injury whilst the automatic door opening mechanism (depending on model) is active.
To check that the door opening mechanism is working correctly:

- the door springs must be adjusted equally on both sides. They are correctly adjusted when the door remains stationary when left half open (approx. 45° opening angle). It is also important that the door cannot fall open.
- the door locking pins automatically retract when the door opens at the end of the drying phase.

▶ Do not connect the appliance to the mains electricity supply by a multi-socket adapter or an extension lead. These do not guarantee the required safety of the appliance (e.g. danger of overheating).

▶ This appliance must not be installed and operated in mobile installations (e.g. on a ship).

▶ Do not install the dishwasher in a room where there is a risk of frost. Frozen hoses may burst or split. The reliability of the electronic control unit may be impaired at temperatures below freezing point.

▶ To avoid any damage to the appliance, the dishwasher must only be operated when it is connected to a fully vented plumbing system.

▶ The plastic housing of the water connection contains an electrical valve. The housing must not be dipped in water.

▶ There are electrical wires in the water inlet hose. Do not cut the water inlet hose, even if it is too long.

▶ The integrated Waterproof system offers protection from water damage, provided the following conditions are met:

- The dishwasher is correctly installed and plumbed in.
- The dishwasher is properly maintained and parts are replaced where it can be seen that this is necessary.
- The tap has been turned off when the appliance is not used for a longer period of time (e.g. during holidays).

The Waterproof system will work even if the appliance is switched off. However, the appliance must remain connected to the electricity supply.

▶ The water pressure (flow pressure at the connection point) must be between 50 and 1000 kPa (0.5 and 10 bar).

▶ A damaged appliance could be dangerous. If the dishwasher gets damaged, switch it off at the mains and call Miele.

▶ The manufacturer's warranty will be invalidated if the appliance is not repaired by a Miele approved service technician.

▶ Faulty components must only be replaced by genuine Miele spare parts. The manufacturer can only guarantee the safety of the appliance when Miele replacement parts are used.

▶ During installation, maintenance and repair work, the appliance must be disconnected from the mains electricity supply.

▶ If the mains connection cable is damaged, it must be replaced with a special cable of the same type (available from Miele) by a Miele authorised service technician only in order to avoid a hazard.

▶ This dishwasher is supplied with a special lamp (depending on model) to cope with particular conditions (e.g. temperature, moisture, chemical resistance, abrasion resistance and vibration). This special lamp must only be used for the purpose for which it is intended. It is not suitable for room lighting. Replacement lamps may only be replaced by a Miele authorised technician.

▶ In areas which may be subject to infestation by cockroaches or other vermin, pay particular attention to keeping the appliance and its surroundings in a clean condition at all times. Any damage which may be caused by cockroaches or other vermin will not be covered by the warranty.

Correct installation

▶ The dishwasher must be installed and connected in compliance with the installation instructions.

▶ Be careful when installing the dishwasher. Wear protective gloves to avoid injury on any sharp metal components.

▶ The dishwasher must be correctly aligned to ensure problem-free operation.

▶ In order to ensure stability, built-under and integrated dishwashers must only be installed under a continuous worktop which is secured to adjacent cabinetry.

▶ If you want to convert your freestanding dishwasher to a built-under ("U") model, you will need to order the appropriate conversion kit. If you remove the existing plinth, you must replace it with a U-model plinth. This is necessary to avoid the risk of injury caused by protruding metal parts.

▶ The door springs on either side need to be evenly adjusted. They are correctly adjusted if the half-opened door (approx. 45° door opening angle) remains in this position when it is released. The door must not fall down under its own weight.
The appliance may only be used with correctly adjusted door springs.

Correct use

▶ Do not use solvents in the dishwasher. Danger of explosion!

▶ Do not inhale or ingest dishwasher detergent. Some dishwasher detergents are strongly alkaline and contain irritants or corrosive ingredients. They can be extremely dangerous if swallowed, and can cause burning in the nose, mouth and throat, or inhibit breathing. Avoid contact with the skin and eyes. Seek medical advice immediately if detergent has been swallowed or inhaled, e.g. Poisons Information Centre (Australia) or National Poisons Centre (NZ).

▶ Avoid leaving the door open unnecessarily as someone could trip over it and be injured by it.

▶ Do not sit or lean on the opened door. This could cause the dishwasher to tip and be damaged, and you could get injured.

▶ Dishes can be very hot at the end of a programme. Allow them to cool until they are comfortable enough to handle before unloading.

▶ Only use detergent and rinse aid formulated for domestic dishwashers. Do not use washing-up liquid.

▶ Do not use commercial or industrial detergents as these may cause damage, and there is a risk of a severe explosive chemical reaction (such as an explosive oxyhydrogen gas reaction).

▶ Do not fill the rinse aid reservoir with powder or liquid detergent. This will cause serious damage to the reservoir.

▶ Inadvertently filling the salt reservoir with powder or liquid dishwasher detergent will damage the water softener. Make sure you have picked up the correct packet of dishwasher salt before filling the salt reservoir!

▶ Only use special coarse grained dishwasher salt for reactivation. Do not use other salts such as cooking salt, agricultural grade or gritting salt. These may contain insoluble additives which can impair the functioning of the water softener.

▶ In an appliance with a cutlery basket (depending on model) cutlery is cleaned and dried more efficiently if placed in the basket with the handles downwards. However, to avoid the risk of injury, place knives and forks etc. with the handles upwards.

▶ Plastic items which cannot withstand being washed in hot water, such as disposable plastic containers, or plastic cutlery and crockery should not be cleaned in the dishwasher. The high temperatures in the dishwasher may cause them to melt or lose shape.

▶ If you use the "FlexiTimer/Delay start" option (depending on model), make sure that the dispenser is dry before adding detergent. Wipe dry if necessary. Detergent will clog if poured into a damp dispenser and may not be thoroughly dispersed.

▶ Please observe the information given in "Technical data" regarding the capacity of the dishwasher.

Accessories

▶ Use only genuine original Miele spare parts. If spare parts or accessories from other manufacturers are used, the warranty will be invalidated, and Miele cannot accept liability.

Disposal of your old dishwasher

▶ Make the door lock inoperative so that children cannot accidentally shut themselves in. Remove or destroy the locking bracket of the door lock, and make appropriate arrangements for the disposal of the appliance.

Disposal of the packing material

The transport and protective packaging has been selected from materials which are environmentally friendly for disposal, and can normally be recycled.

Recycling the packaging reduces the use of raw materials in the manufacturing process and also reduces the amount of waste in landfill sites. Ensure that any plastic wrappings, bags etc. are disposed of safely and kept out of the reach of babies and young children. Danger of suffocation.

Disposing of your old appliance

Electrical and electronic appliances often contain valuable materials. They also contain specific materials, compounds and components, which were essential for their correct function and safety. These could be hazardous to human health and to the environment if disposed of with your domestic waste or if handled incorrectly. Please do not, therefore, dispose of your old appliance with your household waste.

Please dispose of it at your local community waste collection / recycling centre for electrical and electronic appliances. You are also responsible for deleting any personal data that may be stored on the appliance prior to disposal. Please ensure that your old appliance poses no risk to children while being stored prior to disposal.

Energy-saving dishwashing

This dishwasher is exceptionally economical in its use of water and electricity.
You can make the most of your appliance by following these tips:

- For most economical dishwashing, make full use of the baskets without overloading the dishwasher.
- Choose the programme to suit the type of crockery being washed and the degree of soiling.
- Select the ECO programme for energy-saving dishwashing. This programme is the most efficient in terms of its combined energy and water consumption at cleaning normally soiled crockery.
- If your dishwasher is connected to a hot water supply, select the SolarSave programme for washing a lightly to moderately soiled load. Because the water is not heated in this programme, crockery may still be slightly damper at the end of this programme than it would be with other programmes.
- Follow the detergent manufacturer's recommendations on detergent dosage.
- When using powder or liquid detergent you can use $^{1}/_{3}$ less detergent if baskets are only half full.

You can find further tips on energy-saving dishwashing in "Miele's guide to dishwashing".

EcoFeedback consumption indicator

The Consumption function is used for calling up information about the energy and water consumption of your dishwasher (see "Settings menu - Consumption").

Three different types of information can be displayed:

– an estimate of the consumption before the programme begins

– the actual consumption at the end of the programme

– the total consumption of the dishwasher

1. Consumption estimate:

After a programme has been selected, first the name of the programme and, after a few seconds, the estimated energy and water consumption will appear in the display.

The estimated consumption levels will be displayed as a bar chart. The more bars (▮▮▮) in the display, the more energy or water will be used.

The values are influenced by the programme selected and any programme options selected.

The display will change automatically to show the time remaining.

The consumption indicator is switched on as standard. However, you can also switch the indicator off (see "Settings menu - Consumption").

2. Actual consumption

At the end of the programme you can call up the actual amount of energy and water used by the programme which has just been run.

■ Press *OK* when the Consumption (OK) message appears in the display.

Switching the dishwasher off at the end of the programme will delete the actual consumption values for the programme which has just been run.

3. "Consumption" setting

The Consumption setting gives a total of the energy and water which has been used in all previous dishwasher programmes (see "Settings menu - Consumption").

Opening the door

At the end of programmes with a drying phase (see "Programme chart"), the door will open automatically a little in order to help the drying process.
This function can be deactivated, if preferred (see "Settings menu - AutoOpen").

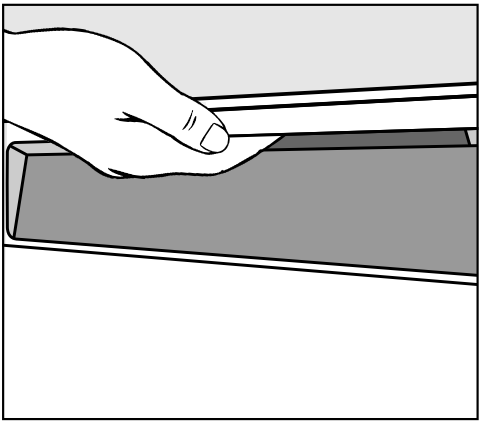

- To open the door, reach under the door grip and pull.
- Open the door fully so that the door catch rail retracts again.

If the door is opened during operation, all functions are automatically interrupted.

⚠ Water in the dishwasher may be hot. Danger of scalding!
Only open the door during operation if absolutely necessary and exercise extreme caution when doing so.

⚠ Keep the area around the door free of obstructions.

Closing the door

- Push the baskets right in.
- Then lift the door upwards and push until it clicks into position.

⚠ Danger of injury!
Do not put your hand inside the door as it is closing.

Safety lock

The child safety lock can be used to prevent children opening the dishwasher. The door can then only be opened by using a lot of force.

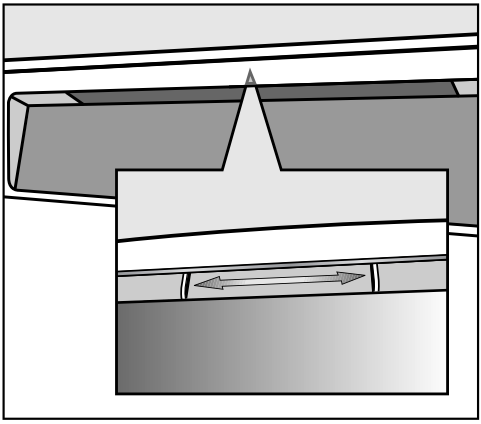

- To lock the door, push the slide underneath the door grip to the right.
- To unlock the door, push the slide to the left.

Basic settings

- Switch the dishwasher on with the ⏻ button.

The welcome screen will appear when the dishwasher is switched on for the first time.

Language

The display will change automatically to the screen for setting the language.

- Use the ∨∧ arrow buttons to select the language you want and also the country, if appropriate, and confirm your selection with *OK*.

To learn about the display, read the section with the same name.

A tick ✓ will appear next to the language that has been set.

Time of day

The display will then change to the screen for setting the time.

The time of day needs to be set before the "FlexiTimer" programme option can be used.
You can also show the current time of day in the display.

- Use the ∨∧ arrow buttons to set the hour and confirm with *OK*.
- Then set the minutes and confirm with *OK*.

Keeping the ∨∧ arrow buttons pressed in will increase or decrease the time automatically.

The display will then change to the screen for setting the clock display.

- Select whether or not the time of day should appear in the display and confirm your selection with *OK*.
- If you have selected Display On, confirm the message about higher energy consumption with *OK*.

Water hardness

The display will change to the screen for setting the water hardness.

- The dishwasher must be programmed to the correct water hardness for your area.
- Your local water authority will be able to advise you of the water hardness level in your area.
- Where the water hardness fluctuates e.g. between 1.8 and 2.7 mmol/l (10 - 15 °d - German scale), always programme the dishwasher to the higher value (2.7 mmol/l or 15 °d in this example).

In the event of a fault, it will help the service technician if you know the hardness of your local water supply.

Enter the water hardness below:

_____mmol/l

The dishwasher is programmed at the factory for a water hardness level of 0.2 mmol/l (1 °d - German scale).

■ Use the ∨∧ arrows to select the hardness of your water supply and confirm with *OK*.

See "Settings menu - Water hardness" for more information.

Finally, prompts will appear in the display.

After confirming these prompts with *OK*, the messages Add salt and Add rinse aid may appear.

■ Add salt and rinse aid if necessary (see "Before using for the first time - Dishwasher salt" and "Rinse aid").

■ Confirm the messages with *OK*.

The programme selected will appear briefly in the display and the appropriate indicator light will come on. Then, if applicable, the estimated energy and water consumption for the programme selected will appear for a few seconds.
Finally, the display will show the estimated programme duration for the programme selected.

Before using the appliance for the first time, you require:

- approx. 1 kg dishwasher salt,
- domestic dishwasher detergent,
- rinse aid formulated for domestic dishwashers.

Every dishwasher is tested at the factory. There will be residual water in the appliance from this test. It is not an indication that it has been used previously.

Dishwasher salt

In order to achieve good cleaning results, the dishwasher needs to operate with soft water. Hard water results in a build-up of calcium deposits on crockery and in the dishwasher. Mains water with a hardness level higher than 0.7 mmol/l (4 °d - German scale) needs to be softened. This takes place automatically in the integrated water softener. The water softener in the dishwasher is suitable for a water hardness level of up to 12.6 mmol/l (70 °d - German scale).

The water softener requires dishwasher salt.
Depending on the water hardness level (< 3.8 mmol/l, or 21 °d - German scale), dishwasher salt is not required if combination tablets are being used (see "Operation, Detergent").

If the water in your area is very soft and constantly **lower than 0.9 mmol/l (5 °d - German scale)**, you do **not** have to add dishwasher salt. The prompt to add salt will be switched off automatically if the water softener has been programmed for this to happen.

⚠ Dishwasher detergent will damage the water softener.
Do not fill the salt reservoir with powder or liquid detergent.

⚠ Only use special coarse grained dishwasher salt for reactivation, as other salts (e.g. cooking salt, agricultural grade or gritting salt) may contain insoluble additives which can impair the functioning of the water softener.

Filling the salt reservoir

- When filling the salt reservoir **only open the door halfway** to ensure that all the salt gets into the reservoir.

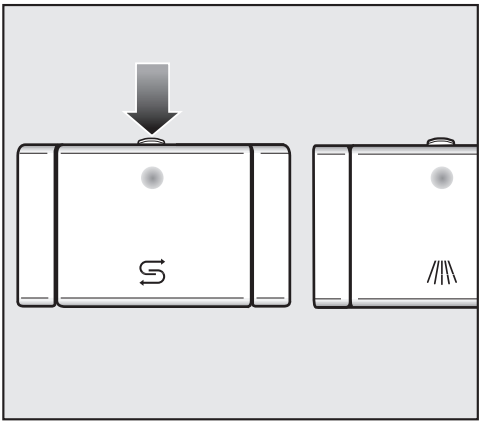

- Press the button on the lid of the salt reservoir in the direction of the arrow.

The flap will spring open.

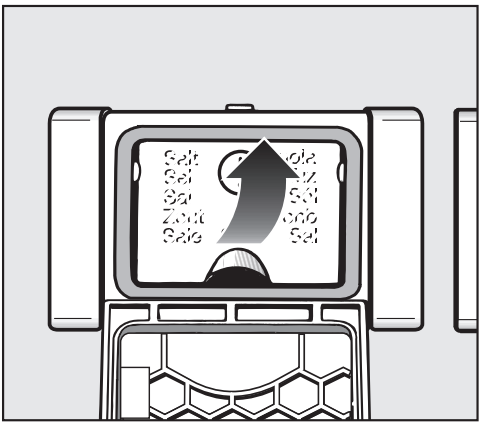

- Lift up the funnel.

Do **not** fill the reservoir with water.

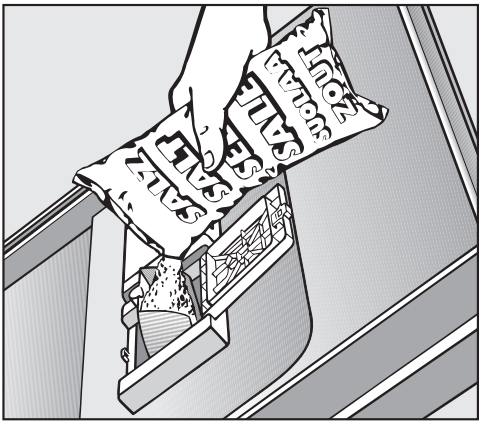

- Add dishwasher salt only until the reservoir is full or until water runs out of the opening. The salt reservoir holds approx. 1 kg of salt, depending on the brand used.

Do not add any more than 1 kg of salt.

As the salt reservoir is filled, displaced water may overflow.

- Clean any excess salt from around the reservoir opening and then close the flap.
- Immediately after filling the salt reservoir, run the *QuickPowerWash* programme with the *Short* option and without any crockery in the dishwasher to dissolve and remove any traces of salt from the cabinet.

Add salt reminder

- Fill the salt reservoir with dishwasher salt for reactivation when Add salt appears in the display (If it appears during a programme, wait until the end of the programme).
- Confirm with *OK*.

The refill reminder will go out.

⚠ Risk of corrosion!
Immediately after filling the salt reservoir, run the *QuickPowerWash* programme with the *Short* programme option selected and without any crockery in the dishwasher to remove any traces of salt from the cabinet.

After the salt reservoir has been filled, the refill reminder may still appear in the display if the salt concentration has not yet reached the correct level. If this is the case, confirm again with *OK*.

The refill reminder will be switched off if you have programmed the dishwasher for a water hardness below 0.9 mmol/l (5 °d - German scale).

If you only ever use multi-function combination products in your dishwasher, you can switch off both refill reminders for salt and rinse aid if you wish (see "Settings menu - Switching off the refill reminders").

If you switch to using detergent that does not contain salt or rinse aid, it is important to remember to add dishwasher salt and rinse aid and to switch the reminders back on.

Rinse aid

Rinse aid is necessary to ensure water does not cling and leave marks on crockery during the drying phase and helps crockery dry faster after it has been washed.
Rinse aid is poured into the storage reservoir and the amount set is dispensed automatically.

⚠ Inadvertently filling the rinse aid reservoir with powder or liquid detergent will damage the reservoir. Only pour rinse aid formulated for domestic dishwashers into the reservoir.

Alternatively, it is possible to use

– household vinegar with a max. 5% acid content

or

– liquid citric acid up to 10% acid content

The resulting rinsing and drying quality will not, however, be as good as when rinse aid is used.

⚠ Do not use vinegar with a higher acid content (e.g. vinegar essence 25% acid).
This would damage the dishwasher.

If you only ever use combination products containing rinse aid in your dishwasher, you do not need to add rinse aid.

Adding rinse aid

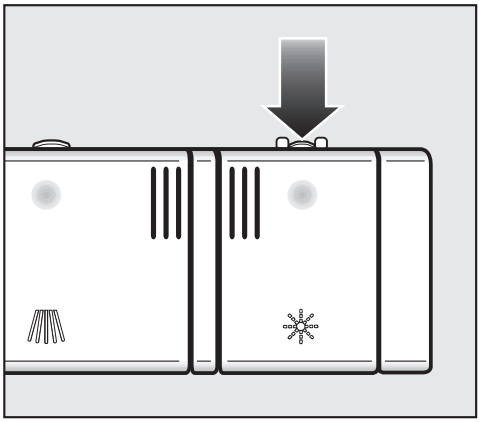

■ Press the button on the lid of the rinse aid reservoir in the direction of the arrow until the flap springs open.

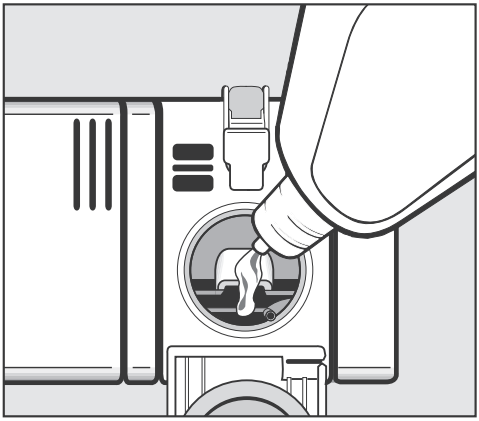

- Add rinse aid only until it is visible in the opening.

The rinse aid reservoir holds approx. 110 ml.

- Close the flap firmly so that it clicks into place. Otherwise water can enter the rinse aid reservoir during a programme.
- Wipe up any spilled rinse aid. This prevents over-foaming occurring during the next programme.

You can adjust the rinse aid dosage for best results (see "Settings menu - Rinse aid").

Add rinse aid reminder

When the ✳ Add rinse aid message appears in the display, the reservoir contains sufficient rinse aid for 2 - 3 programmes only.

- Add rinse aid in plenty of time.
- Confirm with *OK*.

The refill reminder will go out.

If you only ever use multi-function combination products in your dishwasher, you can switch off both refill reminders for salt and rinse aid if you wish (see "Settings menu - Switching off the refill reminders").

If you switch to using detergent that does not contain salt or rinse aid, it is important to remember to add dishwasher salt and rinse aid and to switch the reminders back on.

Notes

Remove coarse food residues from crockery.

There is no need to rinse items under running water.

⚠ Do not wash items soiled with ash, sand, wax, lubricating grease or paint in the dishwasher. Ash does not dissolve and is distributed in the wash cabinet. Wax, sand, lubricating grease and paint cause damage to the dishwasher.

Crockery can be loaded anywhere in the baskets, but the following notes should be observed:

- Do not place crockery and cutlery inside other pieces where they may be concealed.
- Load the crockery so that water can access all surfaces. This ensures that they get properly cleaned.
- Make sure that all items are securely positioned.
- Hollow items such as cups, glasses, pans, etc. must be inverted in the basket.
- Tall, narrow, hollow items, e.g. champagne glasses, should be placed in the centre of the basket to ensure better water coverage.
- Wide based items should be placed at an angle so that water can run off them freely.
- The spray arms must not be blocked by items which are too tall or hang through the baskets. If in doubt, test for free movement by manually rotating the spray arms.
- Make sure that small items cannot fall through the holders in the baskets.
  Small items, e.g. lids, should therefore be placed in the cutlery tray or cutlery basket (depending on model).

Some foodstuffs may contain natural dyes, e.g. carrots, tomatoes or tomato sauce. Plastic items in the dishwasher may discolour if large quantities of these foodstuffs find their way into the dishwasher on the crockery. The stability of plastic items is not affected by this discolouration.
Cleaning silver cutlery in the dishwasher may also cause plastic items to discolour.

Items not suitable for dishwashers:

- Wooden cutlery and crockery or items with wooden parts: these may discolour and fade. The glue used in these items is not dishwasher-proof and wooden handles may come loose after being washed in a dishwasher.
- Craft items, antiques, valuable vases and decorative glassware are also not suitable for dishwashers.
- Plastic items which are not heat-resistant: the high temperatures in the dishwasher may cause them to melt or lose shape.
- Copper, brass, tin and aluminium items may discolour or become matt.
- Colours painted over a glaze may fade after a number of washes.
- Delicate glassware and glassware containing lead crystal: clouding may occur over time.

Please note

Silverware previously cleaned with a **silver polish** may still be damp or spotted at the end of a programme, where water has not run off smoothly. It may need to be rubbed dry with a soft cloth.

Silver which has been in contact with foods containing sulphur can discolour. These include egg yolk, onions, mayonnaise, mustard, pulses, fish, fish brine and marinades.

⚠ Aluminium components (e.g. rangehood grease filters) must not be cleaned with caustic alkaline commercial or industrial cleaning agents.
These may damage the material, or in extreme cases, there is a risk of a severe explosive chemical reaction (such as an explosive oxyhydrogen gas reaction).

Useful tip: When purchasing new crockery and cutlery, make sure they are dishwasher-proof.

Glass care

- Clouding may occur on glasses after frequent washing. If delicate glassware is washed in the dishwasher, ensure that only very low temperatures are used (see programme chart), or a special glass-care programme is used (depending on model). This will reduce the risk of clouding.
- Purchase glassware which is dishwasher-safe (e.g. Riedel glassware).
- Use detergents with glass protective additives.

FlexAssist

The yellow coded FlexAssist parts indicate which elements of the dishwasher baskets and cutlery tray are moveable. They also act as grips and have symbols embossed on them to show what the moveable parts are used for.

Upper basket

See "Loading the dishwasher - Loading examples" for examples of how to load crockery and cutlery.

⚠ For safety reasons, do not operate the dishwasher without the upper and lower baskets in place (except when running the Tall items programme, if available).

- Use the upper basket for small, lightweight and delicate items such as cups, saucers, glasses, dessert bowls, etc.
  Shallow pans or casserole dishes can also be placed in the upper basket.
- Long items such as soup ladles, mixing spoons and long knives should be placed lying down across the front of the upper basket.

Cup rack

- Raise the rack upwards using the yellow lever to make room for tall items.

Glasses can be arranged along the positioning rail of the cup rack to give them some support during the programme.

- Lower the cup rack and lean the glasses against it.

Hinged spikes

The rows of spikes can be lowered to make more room for larger items such as casserole dishes.

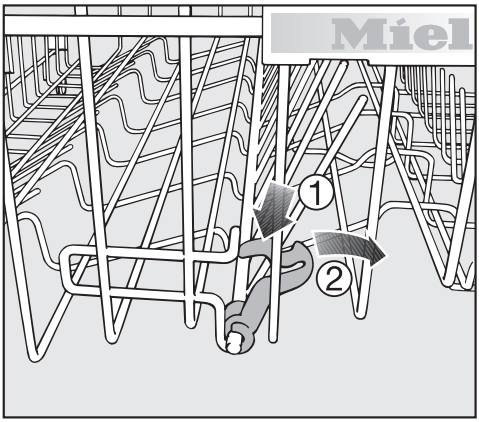

- Press the yellow lever downwards ① and then lower the spikes ②.

Jumbo cup rack (depending on model)

The cup rack can be set at two different widths so that it can also accommodate large cups.

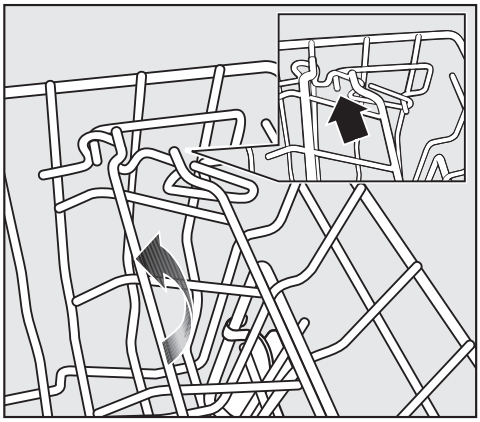

- Pull the cup rack upwards and click it back into position at the required width.

Glass rail

This rail is designed to hold glasses with long stems securely.

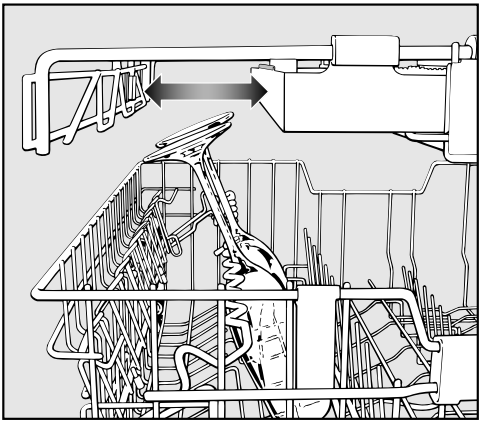

- Lower the rail with the yellow lever 🍷 and lean tall glasses against it.
- You can also move one of the side inserts in the cutlery tray to make more room for tall glasses (see "Cutlery, 3D cutlery tray").

Adjusting the height

You can set the glass rail at two different heights.

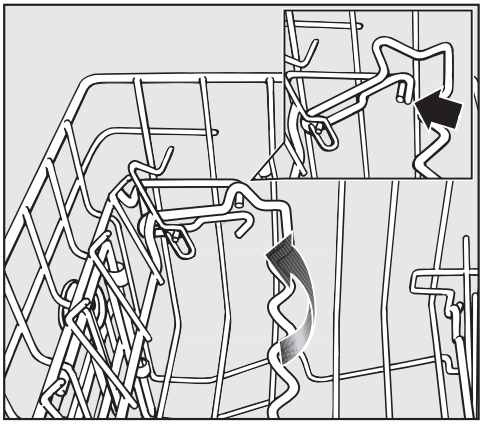

- Pull the rail upwards and click it back into position at the required height.

Use the low setting for small glasses and tumblers.

Use the high setting for tall glasses and glasses with stems.

Adjusting the upper basket

In order to gain more space for taller pieces of crockery in the bottom or upper basket, the upper basket can be adjusted on three levels with 2 cm between each level.

The upper basket can also be set at an angle with one side high and the other side low. This can be useful to help prevent water being left in deep dishes etc. Ensure, however, that the basket can be inserted smoothly into the cabinet. It is better to adjust the basket before loading it.

- Pull out the upper basket.

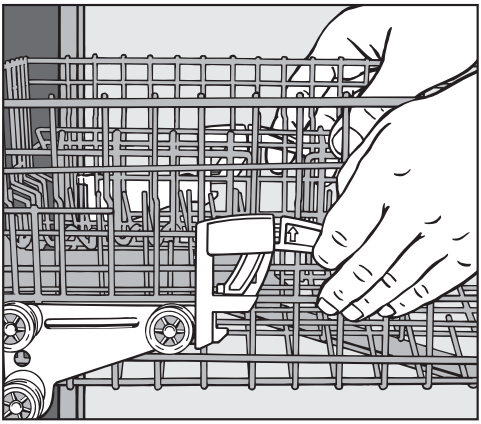

To raise the upper basket:

- Pull the basket up until it clicks into place.

To lower the upper basket:

- Pull upwards on the levers at either side of the upper basket.
- Adjust the basket to the desired height and then push the levers securely back down into position.

Depending on the setting of the upper basket, the following plate dimensions can be accommodated.

Dishwashers with cutlery basket
(see data plate for model number)

Upper basket level	Plate ∅ in cm		
	Upper basket		Lower basket
	Stand-ard	XXL	
Top	20	24	31 (35*)
Middle	22	26	29
Bottom	24	28	27

Dishwashers with cutlery tray
(see data plate for model number)

Upper basket level	Plate ∅ in cm		
	Upper basket		Lower basket
	Stand-ard	XXL	
Top	15	19	31 (35*)
Middle	17	21	29
Bottom	19	23	27

* When tilted, plates of up to 35 cm can be accommodated (see "Lower basket").

Lower basket

See "Loading the dishwasher - Loading examples" for examples of how to load crockery and cutlery.

- For larger and heavier items such as plates, serving platters, saucepans, bowls, etc.
  Glasses, cups and small items such as saucers can also be placed in the lower basket. Do not place thin, delicate glassware in the lower basket.

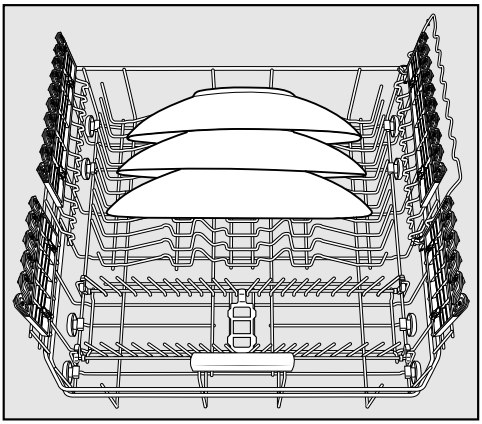

- Place large platters and dishes in the centre of the lower basket.

When tilted, plates up to 35 cm in diameter can be accommodated.

Removable MultiComfort insert

The rear section of the lower basket is used for washing cups, glasses, plates, pots and pans.

You can remove the MultiComfort insert to make more room for larger items such as pans and casserole dishes.

Removing the insert

- Pull the yellow handle forwards and remove the insert.

Refitting the insert

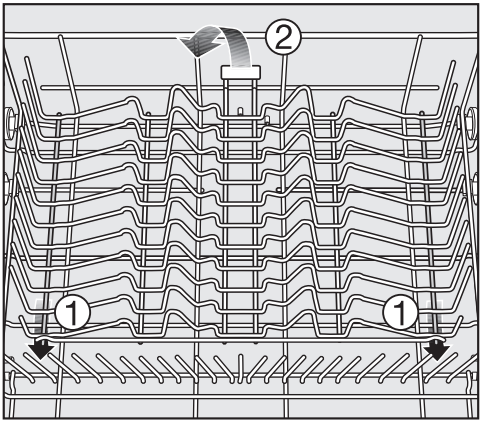

- Fit the insert into the lower basket with the hooks going under the long cross-piece ① as illustrated.
- Press down on the insert until it clicks into position ②.

FlexCare glass holder

Silicone padding in the FlexCare glass holder provides a stable and secure hold for delicate stemware.

- Stem glassware, e.g. wine glasses or champagne flutes, can be leaned against the glass holder or suspended from it.
- The glass holder can be raised to make more room for tall items.

You can set the glass holder at two different heights.

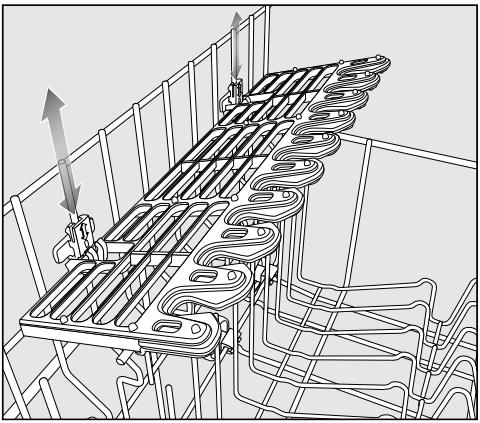

- Slide the glass holder to the desired height until the catches click into place at the top or rest on the bottom.

Glass rail

This rail is designed to hold glasses with long stems securely.

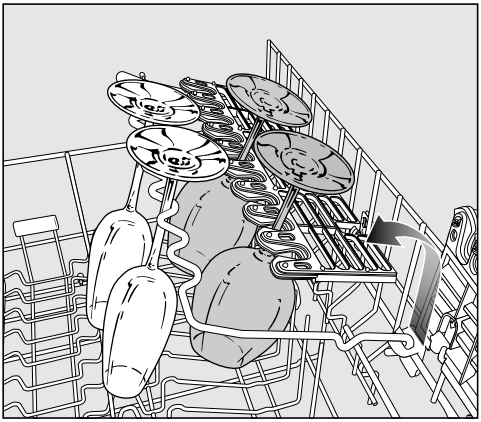

- Lower the rail and lean tall glasses against it.

Hinged spikes

The spikes at the front are used for washing plates, soup bowls, platters, dessert bowls and saucers.

Both rows of spikes can be lowered to make more room for large items, e.g. pots, pans and dishes.

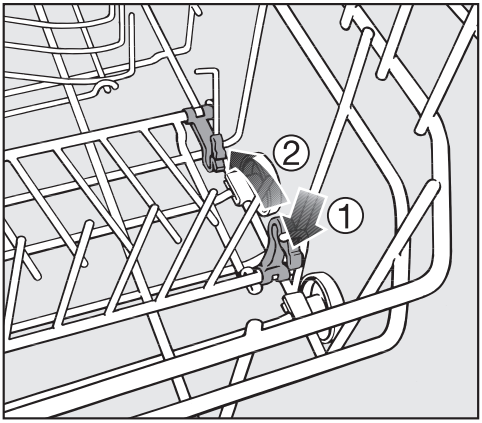

- Press the yellow lever downwards ①, and then lower the spikes ②.

Bottle holder

The bottle holder can be used to wash narrow items, e.g. milk and baby bottles.

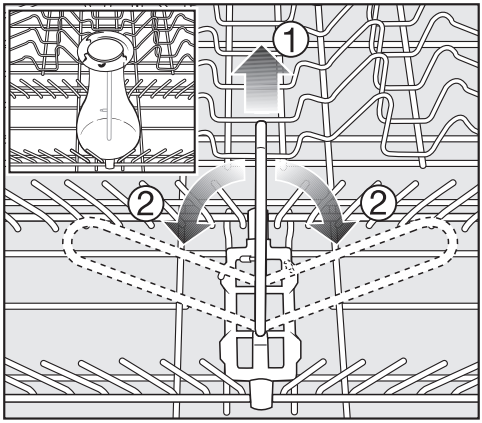

- If the bottle holder is not needed, lift it up ① and fold the sides down ②, as illustrated.

Cutlery

3D cutlery tray + (depending on model)

See "Loading the dishwasher - Loading examples" for examples of how to load crockery and cutlery.

- Arrange the cutlery in the tray as shown.

To make unloading much easier, cutlery should be grouped in zones, one for knives, one for forks, one for spoons, etc.

Spoon heads should be placed in contact with at least one of the serrated retainers on the base of the cutlery tray to ensure that water runs off them freely.

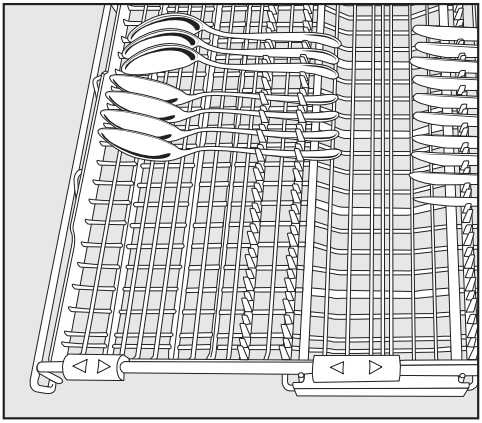

For optimum cleaning results, arrange spoons with the inner part facing the centre of the cutlery tray.

The upper spray arm must not be blocked by items which are too big (e.g. cake servers).

The side sections of the tray can be moved into the middle using the yellow grips in order to accommodate tall items of crockery in the upper basket (see also "Upper basket, glass rail").

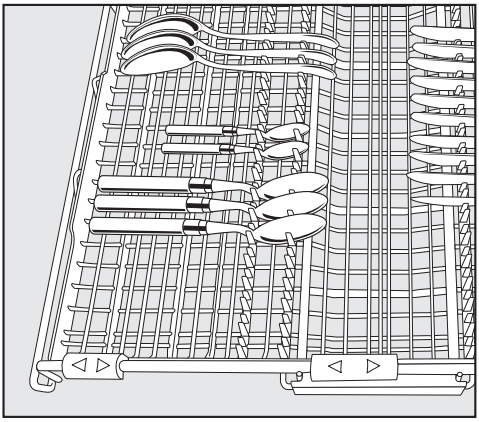

If spoon handles do not fit between the holders, then lay them the other way round.

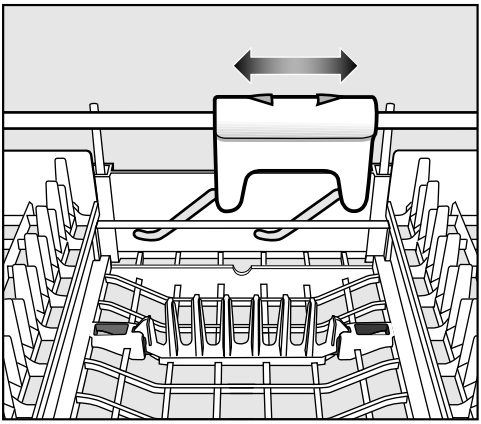

You can use the yellow slide to adjust the height of the middle section of the cutlery tray to make more room for large items of cutlery, such as serving spoons and ladles.

Both rows of spikes in the middle section of the cutlery tray can be flipped over to make room for larger pieces of cutlery.

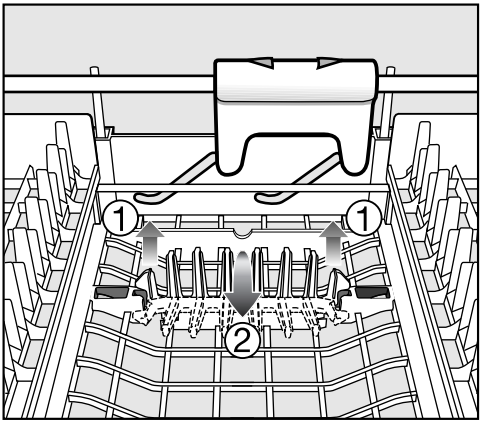

- Raise the spikes ① and then flip them over ②.

Cutlery basket (depending on model)

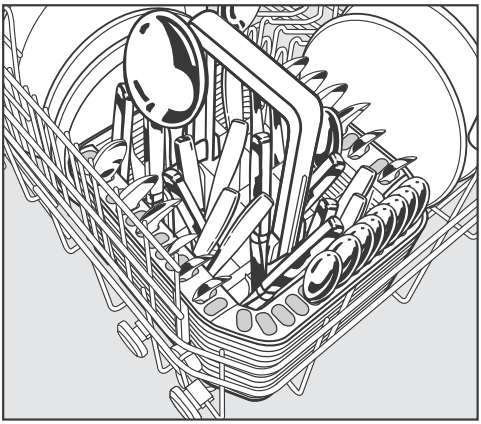

The cutlery basket can be placed anywhere on the front rows of spikes in the lower basket.

- To avoid the risk of injury, knives and forks should be placed with the handles upwards in the basket. However, cutlery placed handle down in the basket will come out cleaner and drier.
- Place small items of cutlery in the individual slots on three sides of the cutlery basket.

Cutlery insert for the cutlery basket

Use the insert supplied for heavily soiled items of cutlery. The insert separates the items so that they can be more easily accessed by water.

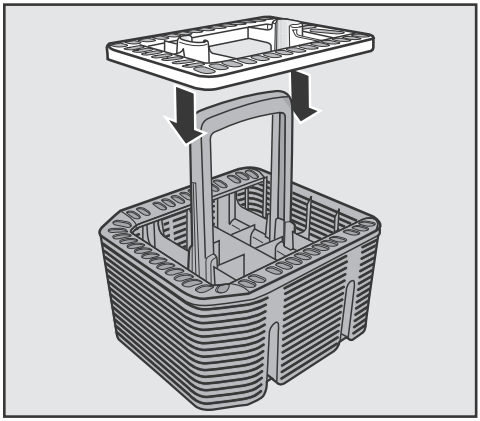

- Fit it onto the cutlery basket if required.

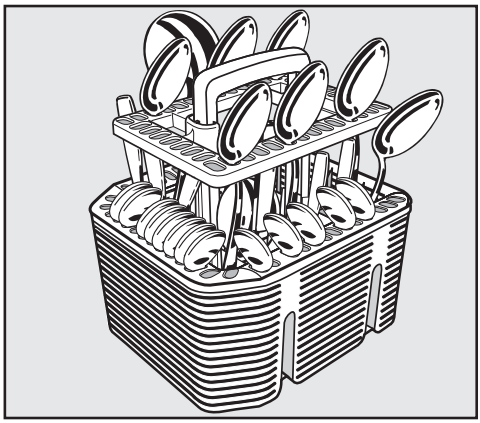

- Insert cutlery with the handles facing downwards.
- Distribute them evenly along the insert.

Loading examples

Dishwashers with cutlery tray

Upper basket

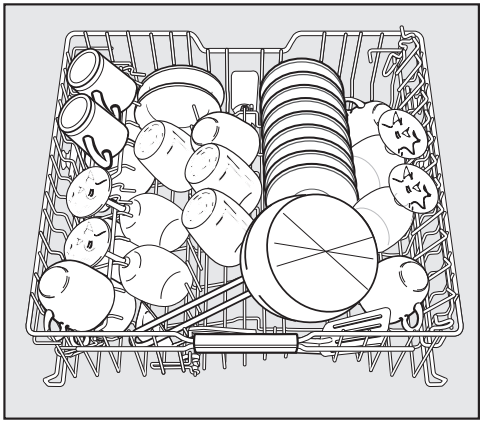

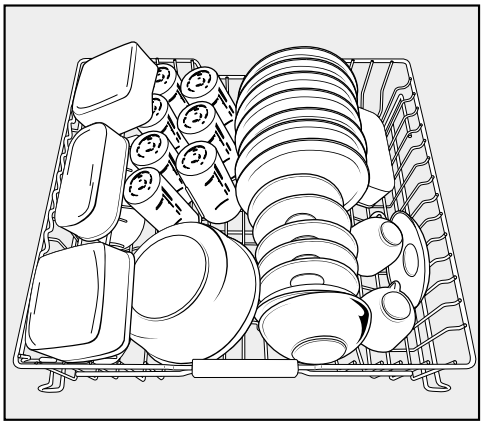

Lower basket

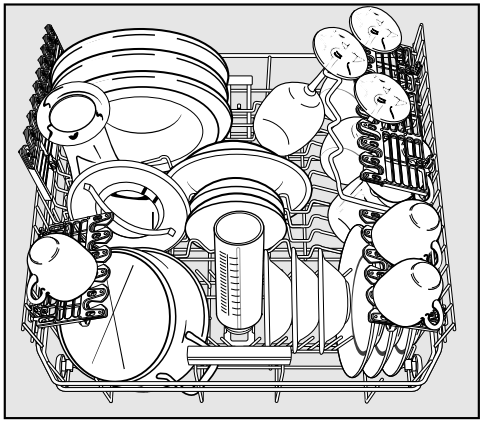

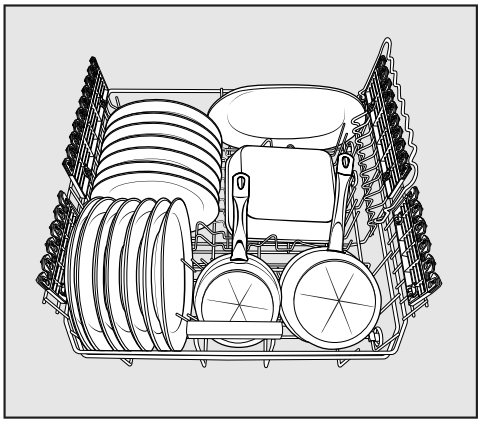

Cutlery tray

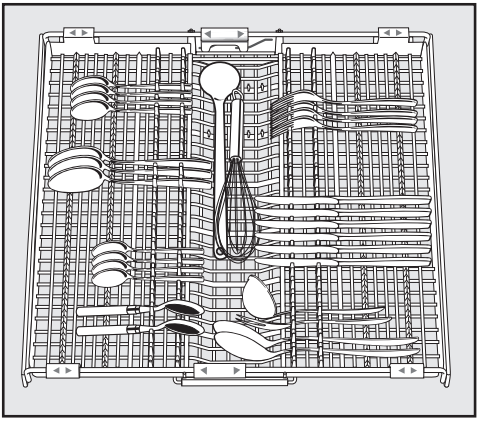

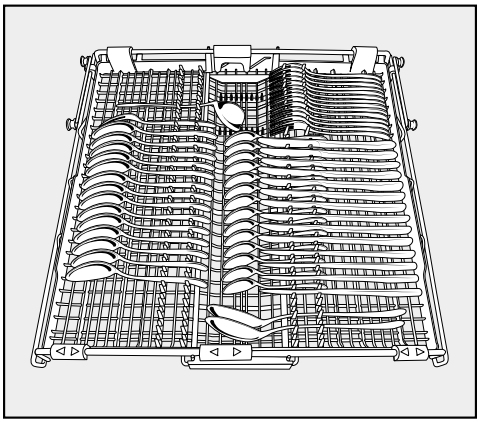

Heavily soiled items

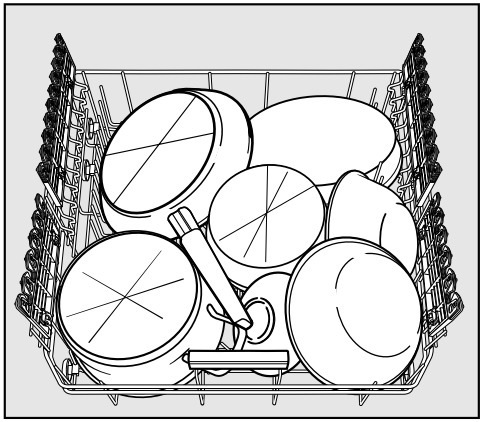

Dishwashers with cutlery basket

Upper basket

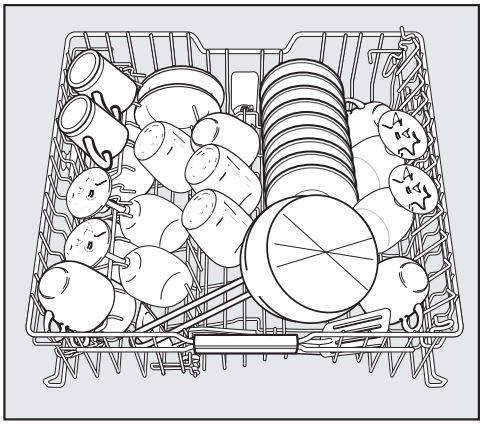

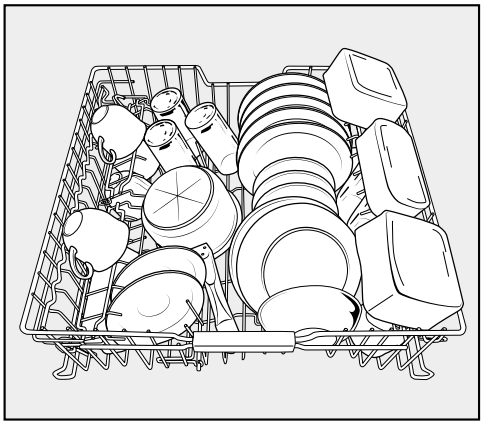

Lower basket

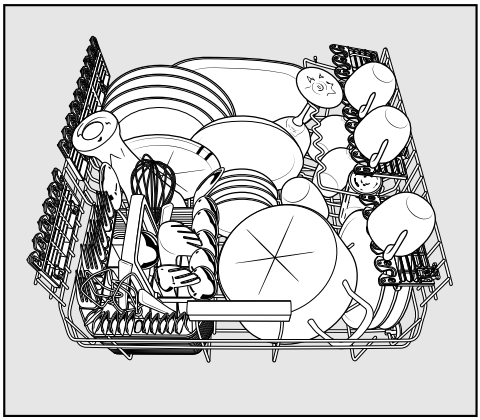

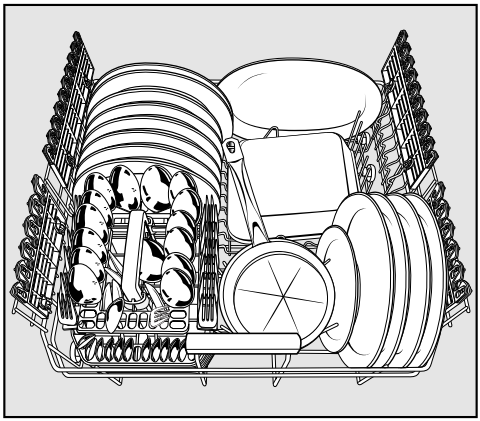

Cutlery basket

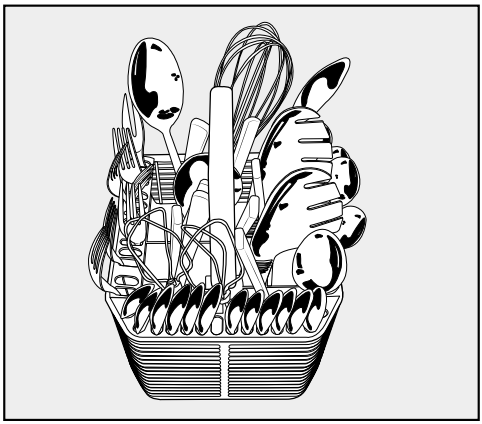

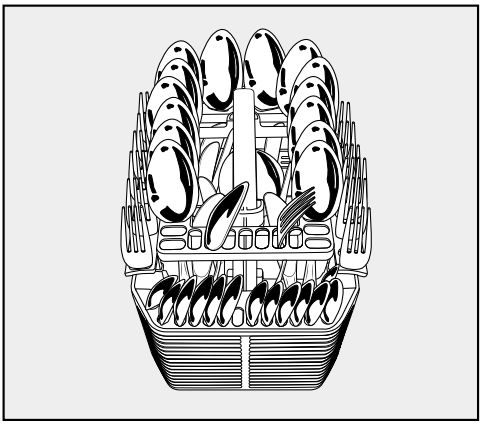

Heavily soiled items

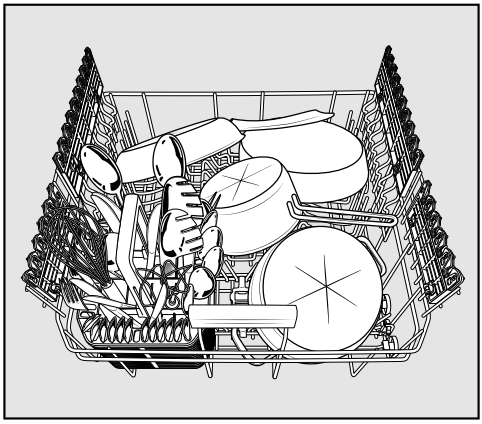

Comparison tests

Standard height with cutlery tray

Test standard:	AS/NZS 2007.1:2005, AS/NZS 2007.2:2005; AS/NZS 6400:2005
Standard programme for energy label comparison tests:	ECO
Capacity:	14 place settings
Detergent quantity:	32.5 g in Compartment II
Rinse aid dispensing:	Setting 3

You can find information on adjusting the rinse aid dosage in the "Rinse aid" section of this booklet.

The door opens automatically during the drying phase.
Do not close the door until the drying test has finished.

Upper basket level:

Position:	Bottom
Jumbo cup rack (if available):	Outer position

Loading examples

Pictures illustrating how to load the dishwasher are shown on the following pages.

Picture ①: Upper basket

Picture ②: Lower basket

Picture ③: Cutlery tray

Do not lower or remove the basket inserts.

Remove the bottle holder from the lower basket (if available).

Capacity

14

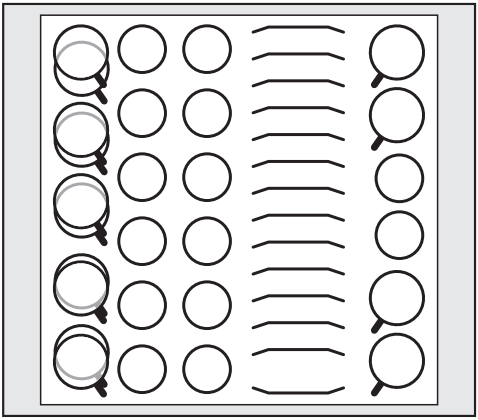

①

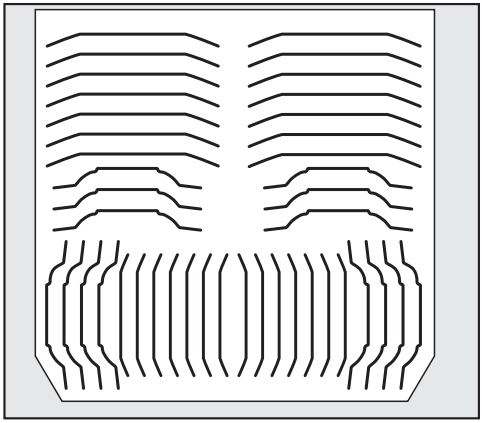

②

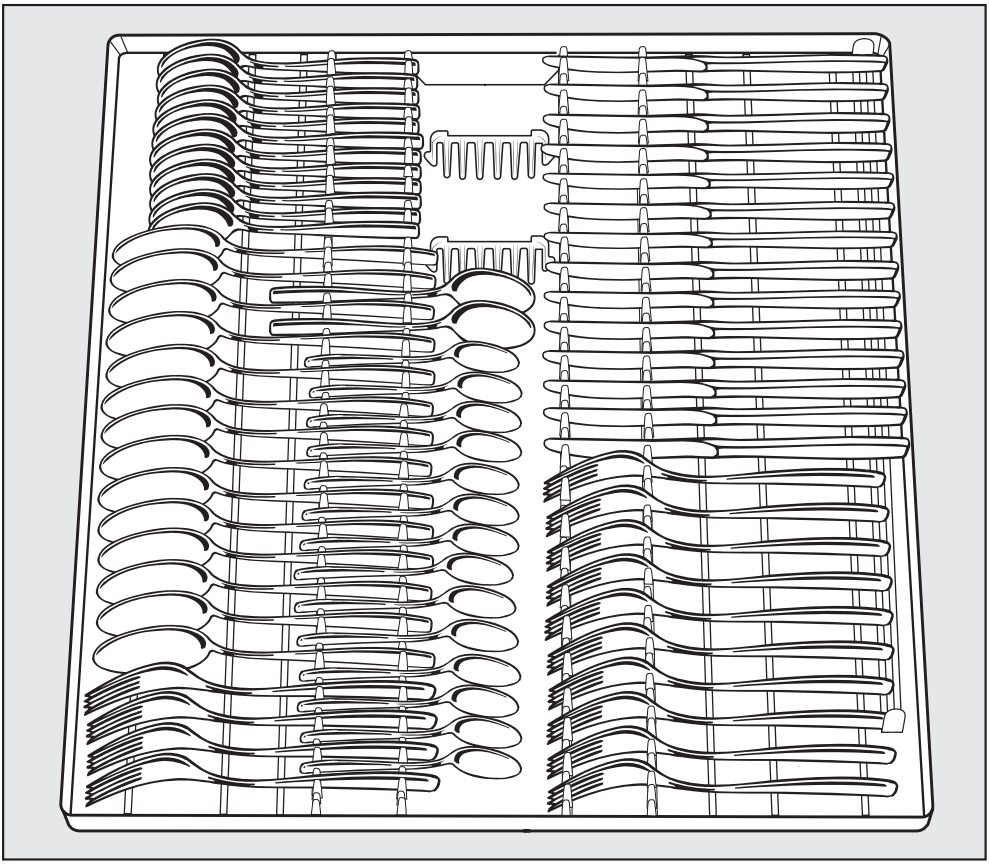

③

XXL height with cutlery tray

Test standard:	AS/NZS 2007.1:2005, AS/NZS 2007.2:2005; AS/NZS 6400:2005
Standard programme for energy label comparison tests:	ECO
Capacity:	15 place settings
Detergent quantity:	33.7 g in Compartment II
Rinse aid dispensing:	Setting 3

You can find information on adjusting the rinse aid dosage in the "Rinse aid" section of this booklet.

The door opens automatically during the drying phase.
Do not close the door until the drying test has finished.

Upper basket level:

Position:	Bottom
Jumbo cup rack (if available):	Outer position

Loading examples

Pictures illustrating how to load the dishwasher are shown on the following pages.

Picture ①: Upper basket

Picture ②: Lower basket

Picture ③: Cutlery tray

Do not lower or remove the basket inserts.

Remove the bottle holder from the lower basket (if available).

Capacity

15

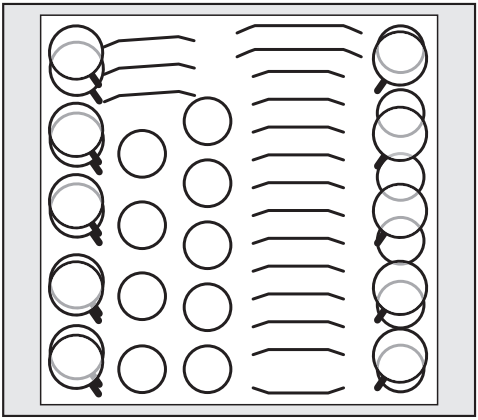

①

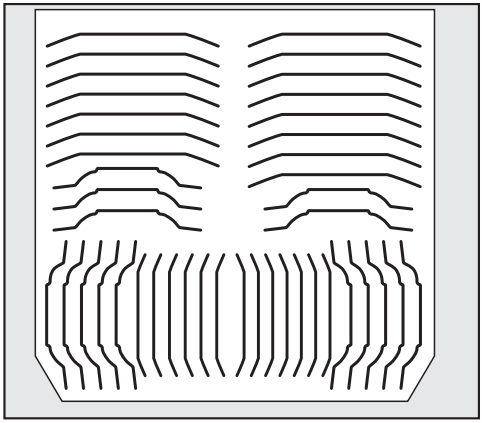

②

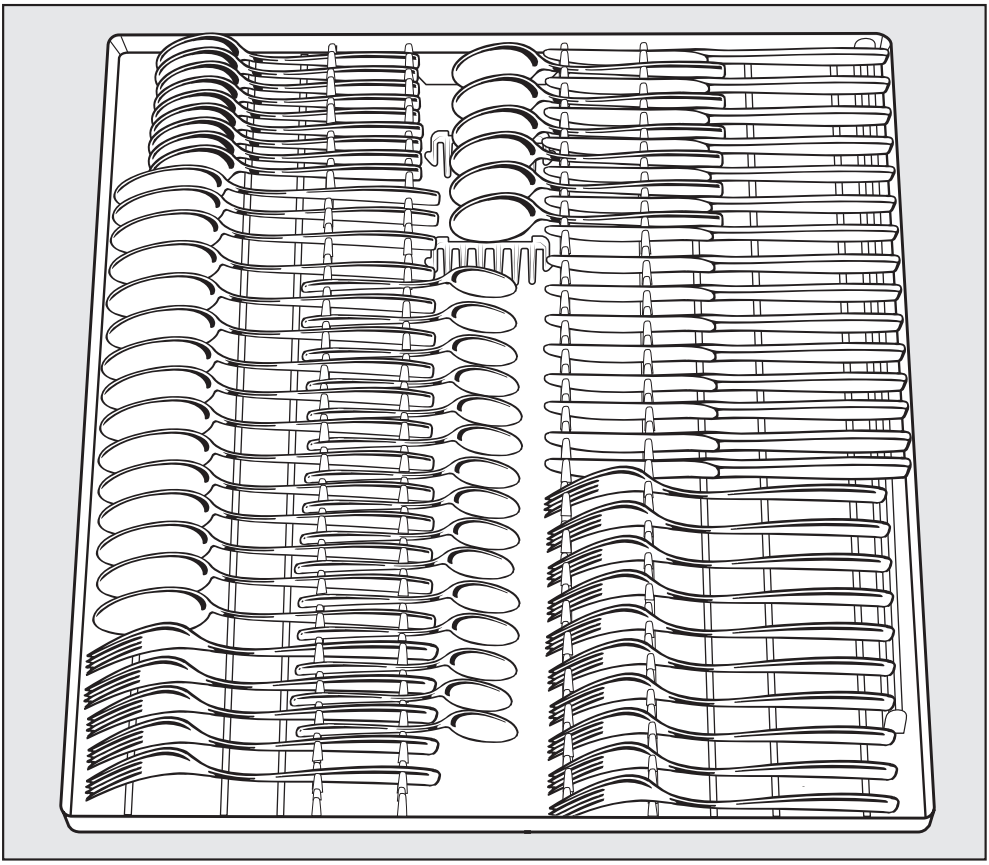

③

Detergent

⚠ Only use detergents formulated for domestic dishwashers. Do not use washing-up liquid.

Active ingredients

Modern detergents contain various active ingredients, the most important of which are:

- Complexing agents to prevent calcification.
- Alkalis to aid the removal of dried on soiling.
- Enzymes to break down starch and loosen protein.
- Oxygen based bleaching agents to remove coloured stains (e.g. tea, coffee, tomato sauce).

Most dishwasher detergents are mildly alkaline and contain enzymes and oxygen based bleaching agents.

Types of detergent:

- Powder and liquid gel detergents. These detergents allow you to adjust the amount dispensed according to the amount of load and level of soiling.
- Tab detergents. These are suitable for most levels of soiling.

You can also buy combination products (see "Programme options - DetergentAgent", if applicable).
In addition to detergent, these products contain rinse aid and salt substitutes. They are available as "3 in 1" or when they also contain other components such as glass and stainless steel protective additives and enhanced cleaning power, as "5 in 1", "7 in 1", "All in 1" etc.
Refer to the manufacturer's packaging as to whether combination products are suitable for the water hardness level in your area.
Please note that the cleaning and drying results of combination detergents can vary greatly.

For optimum cleaning and drying results, use Miele dishwasher detergent and add Miele salt and Miele rinse aid separately. See "Optional accessories".

Detergent dosage

- Follow the dosage recommended by the manufacturer on the packaging.
- Unless directed otherwise, use one detergent tab or add 20 to 30 ml detergent to compartment II, depending on the level of soiling. With very heavy soiling you can also add a small amount of detergent to compartment I.
- Tabs may not dissolve completely when the "QuickPowerWash" programme (if available) is used.

Failure to dispense the recommended amount of detergent may impair cleaning results.

⚠ Dishwasher detergents contain irritant or corrosive ingredients which can cause burning in the nose, mouth and throat if swallowed, or inhibit breathing.
Avoid inhalation of powder detergents and do not ingest dishwasher detergent. Seek medical advice immediately if detergent has been swallowed or inhaled.
Keep detergent and other household agents out of the reach of children at all times. Keep children away from the dishwasher when the door is open. There could still be detergent residues in the cabinet. To avoid the danger of children coming into contact with the dishwasher detergent, only add detergent just before starting the programme and close the door, activating the safety lock (if your dishwasher is fitted with one).

Adding detergent

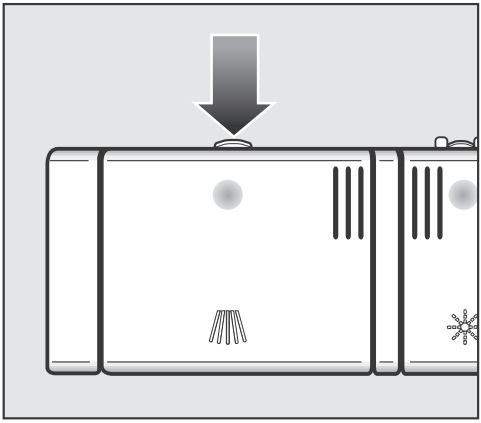

- Press the opening catch on the detergent dispenser. The flap will spring open.

The flap is always open at the end of a programme.

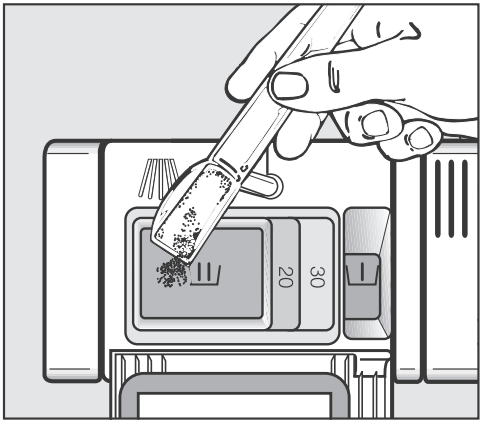

- Add the required amount of detergent and close the flap.
- Make sure that the detergent packaging is properly closed after use to avoid it getting damp and becoming lumpy.

For information

Compartment I holds max. 10 ml, Compartment II holds max. 50 ml.

There are marks in Compartment II to assist with dispensing: 20, 30. The marks indicate a level of approx. 20 or 30 ml when the door is open in a horizontal position.

Switching on

- Make sure the spray arms are not obstructed.
- Close the door.
- Turn on the tap if it is turned off.
- Press the ⏻ button for at least 2 seconds.

The programme selected will appear briefly in the display and the appropriate indicator light will come on. Then, if applicable, the estimated energy and water consumption for the programme selected will appear for a few seconds.
Finally, the display will show the estimated programme duration for the programme selected.

Selecting a programme

Choose your programme according to the type of load and how dirty it is.

The different programmes and their uses are described in the **Programme chart** later on in this booklet.

- Use the programme selector button ∨ to select the programme required.

The indicator light next to the selected programme will come on.

Further programmes are selected via the *Further* ⧉ option.

- Use the programme selector button ∨ to select the *Further* ⧉ option.

The first of the further programmes will appear in the display.

- Use the ∨∧ arrow buttons to select the programme required.

During the course of the programme you can use *OK* to display the name of the programme which is currently running.

You can now select programme options (see "Programme options").

If any programme options are selected, the appropriate indicator lights will also light up.

Starting the programme

■ Press the *Start* or *OK* button.

The programme will begin.

The *Start* indicator light will come on.

A programme should only be cancelled in the first few minutes, if at all. Otherwise important programme stages could be omitted.

Time display

The estimated duration of the programme selected appears in hours and minutes in the display before the programme begins. During the programme, the time left until the end of the programme is displayed.

Each programme stage is indicated by a symbol:

- Pre-wash / Soak
- Main wash
- Interim rinse
- Final rinse
- Drying
- Finish

The programme duration displayed may vary with the same programme. It is influenced by, among other things, the water temperature at each intake, the reactivation process, the water softener, the type of detergent, the amount of crockery and how dirty it is.

When a programme is selected for the first time, the display will show the average programme duration for a cold water intake.

The times shown in the Programme chart refer to standard test loads and temperatures.

Each time a programme is run, the electronic unit takes the new conditions into account, and calculates the time required.

Energy management

To save energy, the dishwasher will switch off automatically a few minutes after the last time a button has been pressed or after the end of a programme.

- Press the ⏻ button to switch the dishwasher back on.

The dishwasher will not switch off automatically if the time of day display has been activated (see "Settings menu - Time of day").

The dishwasher will not switch off whilst a programme or the FlexiTimer is running or if there is a fault.

At the end of the programme

The programme has finished when ⏲ Finished appears in the display and the door has opened slightly (if applicable).

In the QuickPowerWash programme the door will not open until a few minutes after the programme has finished.

If the Consumption programmable function is switched on, you can now call up the actual energy and water consumption of the programme which has just finished (see "Caring for the environment - EcoFeedback consumption indicator").

The drying fan may continue to run for a few minutes at the end of the programme.

- Open the door fully so that the door catch rail retracts again.

You can now empty the dishwasher.

⚠ If you have deactivated the automatic door opening function (see "Settings menu - AutoOpen"), but would still like to open the door at the end of the programme, then make sure that you open the door fully.
Otherwise steam from the dishwasher could damage the edge of the worktop because the fan is no longer running.

Switching off

At the end of a programme:

- The dishwasher can be switched off at any time using the ⏻ button.

Switching the dishwasher off during a programme cancels the programme.

Switching the dishwasher off during the run-up to a Delay start time (FlexiTimer) will also stop the process.

If the dishwasher is not going to be used for a longer period of time, e.g. whilst on holiday, the tap should be turned off.

Unloading the dishwasher

Dishes tend to break and chip more easily when they are hot. Allow the dishes to cool until they are comfortable enough to handle before unloading them.

If you open the door fully after switching off, the dishes will cool much faster.

First unload the lower basket, then the upper basket and finally the cutlery tray (depending on model).
This will prevent water drops from the upper basket and cutlery tray from falling onto the dishes in the lower basket.

Interrupting a programme

A programme is interrupted as soon as the door is opened.
If the door is closed again, the programme will continue from the point it was at before the door was opened.

⚠ Water in the dishwasher may be hot. Danger of scalding!
Only open the door if absolutely necessary and exercise extreme caution when doing so. Before closing the door again, leave it ajar for approx. 20 seconds. This will enable the temperature in the wash cabinet to settle. Then raise the door up and push until the catch engages.

Changing a programme

If the detergent dispenser flap has already opened, do not change the programme.

If a programme has already started and you wish to change it, proceed as follows:

- Switch the dishwasher off with the ⏻ button.
- Switch the dishwasher on again with the ⏻ button.
- Select the programme you want, and then start it.

Options

Options can be selected and deselected using the appropriate buttons and the display before starting the programme.

- Switch the dishwasher on with the ⏻ button.

The *Start* indicator light will flash.

- Select a programme.
- Press the button for the option you want.

The indicator light for the relevant button will come on if the option is available for the programme selected.

If the option is not compatible with the programme selected, a message to this effect will appear in the display.

- In this instance, confirm the message with *OK*.
- Press the *Start* button to start the programme.

The option selected will remain active for that particular programme until the setting is changed.

Short

The *Short* option reduces the duration of programmes in which this option is available by up to 30% (see "Programme chart").

In order to achieve optimum cleaning results, energy consumption may increase slightly with this option.

When used in combination with the *QuickPowerWash* programme, the *Short* option results in a wash programme without drying or automatic opening of the door (if available).

Energy save

The *Energy save* option reduces the energy consumption of programmes in which this option is available by up to 20%.

In order to achieve optimum cleaning results, the programme duration is extended with this option.

Intensive lower basket

The *Intensive lower basket* option intensifies cleaning performance in the lower basket in programmes in which this option is available.

Energy and water consumption are increased slightly due to the extended wash duration in the lower basket.

Extra dry

The *Extra dry* option improves the drying performance in programmes in which this option is available.

Energy consumption is increased due to an extended fan running time and an increased final rinse temperature.

FlexiTimer

The FlexiTimer ◷ gives you three ways of starting the programme by means of delaying the start. You can set the start time or the finish time of a programme. You also have the option of taking advantage of time variable economy rates of electricity using the EcoStart or SmartStart function.

When using the Delay start function, make sure that the detergent compartment is dry before adding detergent. Wipe dry with a cloth if necessary. If the compartment is wet, powder detergent can become lumpy and stick to the dispenser, with the result that it is not fully dispensed.
Do not use liquid detergent when selecting Delay start, as it can run into the dishwasher before it is required.

⚠ To prevent children coming into contact with dishwasher detergent:
Do not fill the detergent dispenser **until just before starting the programme**, i.e. before you activate the FlexiTimer with *OK*. Also activate the door safety lock.

- Switch the dishwasher on with the ⏻ button.

The *Start* indicator light will flash.

- Select the required programme.
- Press the ◷ button.

You can use the ∨∧ arrow buttons to select the Start at, Finish at, EcoStart function or SmartStart and Back ⮌.

- Confirm selection of the function you want with *OK*.

The current time of day will appear and the hour number block will be highlighted.

You can now enter the time you want using the ∨∧ arrow buttons and confirm with *OK*.

If, while you are setting the time, you do not press any buttons for several seconds, the display will revert to the previous menu. You will then have to enter your settings again.

If the time of day (clock) display has been switched off (see "Settings menu, Time of day"), the display will go out after a few minutes if you have activated a Delay start time and only the *Start* indicator light will flash slowly.

Press any button to switch the display back on again for a few minutes.

Start at

With the Start at function, you set the exact time at which you want the programme to start.

- Use the ∨∧ arrow buttons to set the hour and confirm with *OK*.

The hour will be saved and the minute number block will be highlighted.

- Use the ∨∧ arrow buttons to set the minutes and confirm with *OK*.

The saved start time for the programme selected will appear in the display.
The *Start* indicator light will come on.

When the set time is reached, the programme selected will start automatically.
The time remaining will appear in the display, the ◷ indicator light will go out and the *Start* indicator light will light up.

Finish at

With the Finish at function, you set the time at which you wish the programme to end.

- Use the ∨∧ arrow buttons to set the hour and confirm with *OK*.

The hour will be saved and the minute number block will be highlighted.

- Use the ∨∧ arrow buttons to set the minutes and confirm with *OK*.

The estimated start time for the programme selected will appear in the display.
The *Start* indicator light will come on.

A message will appear in the display if the programme cannot be completed by the set finish time because it has too long a running time.

When the estimated time is reached, the programme selected will start automatically.
The time remaining will appear in the display, the ◷ indicator light will go out and the *Start* indicator light will light up.

EcoStart

The EcoStart function allows you to take advantage of time variable economy rates of electricity. Before you can use this option, you must set up to three electricity tariff time zones (see "Settings menu - EcoStart").
You then set the latest time at which the programme selected should end.
The dishwasher will start automatically in the cheapest tariff zone within the time set.

- Use the ∨∧ arrow buttons to set the hour and confirm with *OK*.

The hour will be saved and the minute number block will be highlighted.

- Use the ∨∧ arrow buttons to set the minutes and confirm with *OK*.

The estimated start time of the programme selected will appear in the display.
The ◷ and *Start* indicator lights will light up.

The programme selected will start automatically in the cheapest time zone and will finish at the latest at the finish time set.
The time remaining will appear in the display, the ◷ indicator will go out and the indicator light for the *Start* button will light up.

SmartStart
(only functional in selected countries)

The SmartStart function is used for starting your dishwasher automatically at a time when your energy costs are most economical.

If the SmartStart option has been activated in the Settings ⚑ menu, SmartStart will appear in the "FlexiTimer" ◷ menu instead of EcoStart (see "Settings, Miele@home, SmartStart").

If your energy provider offers this service, they will send a signal to your dishwasher when energy costs are at their most economical.
This signal will start the dishwasher.

You can set a time, by which the programme has to have finished by. The dishwasher will then calculate the latest possible start time for the programme selected and will wait until this start time for the signal from the energy provider.

Set the time, by which the selected programme has to be finished by.

- Use the ∨∧ arrow buttons to set the hour and confirm with *OK*.

The hour will be saved and the minute number block will be highlighted.

- Use the ∨∧ arrow buttons to set the minutes and confirm with *OK*.

The message Wait for SmartStart will appear in the display.
The ◷ and *Start* indicator lights will light up.

The selected programme will start automatically as soon as the energy provider has sent the signal, or the latest calculated start time has been reached.

The time remaining will appear in the display, the ◷ indicator will go out and the *Start* indicator light will come on.

Changing or deleting set times

You can change the set times or the programme before the start time in the display is reached.

- Press the ◷ sensor.
- Use the ∨∧ arrow buttons to select the setting you want to change and confirm with *OK*.
- Use the ∨∧ arrow buttons to select the Change or Delete function and confirm with *OK*.

After confirming the Change function, you can change the set time.

After confirming the Delete function, the programme duration will appear in the display and the programme will start.
The ◷ indicator light will go out and the *Start* indicator light will light up.

DetergentAgent

For optimum cleaning results, the dishwasher automatically adjusts the programme sequence to the type of detergent being used. Depending on the programme, this can mean that the running time and energy consumption vary slightly.

If you only ever use multi-function combination products containing salt and rinse aid in your dishwasher, you can switch the reminders off if you wish (see "Settings menu - Refill reminders"). The DetergentAgent function will not be affected by this.

Ensure that you refill dishwasher salt and rinse aid and switch on the refill reminders again if you are not using combination products.

Programme chart

Programme	Programme sequence				
	Pre-wash	Main wash °C	Interim rinse	Final rinse °C	Drying
ECO [1]	X	48	X	34	X
Automatic	Variable programme sequence, sensor-controlled adjustment according to amount of crockery and soiling				
	If required	45-65	If required	57-70	X
Intensive 75°C	2X	75	X	58	X
QuickPower Wash		65	X	65	X
Gentle	X	45	X	58	X
Light soiling 55°C	X	55	X	58	X
Hygiene		69	2X	70	X
ExtraQuiet		46	X	60	X
SolarSave	2X	X	X	X	X
Tall items 65°C	X	65	X	58	X
Maintenance programme		75	2X	70	X

[1] This programme is the most efficient in terms of its combined energy and water consumption for cleaning normally soiled crockery.

Consumption [2]			Duration [2]	
Electricity		Water		
Cold water 15°C kWh	Hot water 55°C kWh	Litres	Cold water 15°C h:min	Hot water 55°C h:min
0.53 [3] / 0.54 [4]	0.32 [3] / 0.34[4]	11.4 [3] / 11.1 [4]	2:49	2:41
0.75 [5] -1.05 [6]	0.50 [5] -0.65[6]	6.5 [5] -15.0 [6]	1:54-2:52	1:37-2:47
1.35	0.90	14.5	2:59	2:49
1.30	0.80	11.5	0:58	0:58
0.95	0.45	13.5	2:06	1:51
1.05	0.60	13.5	2:17	2:03
1.55	1.15	13.0	2:31	2:27
1.00	0.70	9.5	4:20	4:11
	0.06	27.0		2:30
1.10	0.55	14.0	1:54	1:42
2.05	1.25	22.0	2:11	1:47

[2] In practice there may be variations to these figures due to variable conditions and data recorded by the sensors. The durations displayed in your dishwasher will reflect your household conditions.
Selecting programme options will also affect consumption levels and programme durations (see "Programme options").

[3] Standard height dishwashers

[4] XXL dishwashers

[5] Part load with light soiling

[6] Full load with heavy soiling

Programme chart

Crockery	Food deposits	Programme features
Mixed, everyday crockery	All fresh to dried-on food deposits	Variable, sensor-controlled programme sequence Shorter duration
		Short programme with duration less than 1 hour [3]
Heat-sensitive glasses and plastic	Fresh, easily removed food deposits	Gentle programme with glass care Shorter duration
Mixed crockery		
	Normal food deposits which have begun to dry on	Water and energy saving programme Shorter duration
Pots, pans, everyday porcelain and cutlery	Fresh food deposits which have begun to dry on	Average programme values Shorter duration
	Burnt-on, stubborn, dried-on food deposits containing starch or protein [1]	Maximum cleaning power Shorter duration
Items such as baby bottles, chopping boards etc., that need to be hygienically clean	Fresh food deposits which have begun to dry on	Programme with special parameters for hygienic cleaning
No crockery	Residual salt after refilling the salt container	Flushes out salt residues

[1] Food such as potatoes, pasta, rice or stews can leave starchy deposits. Deposits containing protein can be left by food such as meat, fish or eggs and bakes.

Programme	Detergent	
	Compartment I [2]	Compartment II [2]
Automatic / **+short**	-	25 ml or 1 tab
QuickPowerWash	-	1 tab [3]
Gentle / **+short**	-	20 ml or 1 tab
ECO / **+short**	-	25 ml or 1 tab
Light soiling 55°C [4] / **+short**	-	25 ml or 1 tab
Intensive 75°C / **+short**	10 ml	25 ml or 1 tab
Hygiene	-	25 ml or 1 tab
QuickPowerWash +short	-	-

[2] see "Detergent"
[3] best cleaning results are only achieved with Miele's quick dissolving UltraTab Multi
[4] in "Further" (depending on model)

Further programmes

Hygiene

Special programme for items which need to be hygienically clean, e.g. baby bottles and chopping boards.

ExtraQuiet

Very quiet programme with a longer duration. Suitable for mixed loads of crockery, pots and pans with moderate, slightly dried on food residues.

SolarSave

This programme does not heat the water. To use it, the water intake temperature must be at least 45°C (see "Water connection - Connection to the water supply"). This programme is suitable for mixed loads of crockery and glassware with moderate, slightly dried on food residues.

Tall items 65°C

Programme for very large heat-resistant items, (e.g. very deep pans). In this programme the upper basket needs to be removed to make space for large items in the lower basket. This programme has a medium action to remove fresh to slightly dried on residues.

Maintenance programme

The wash cabinet is largely self-cleaning. However, if residues or soiling build up in the cabinet, they can be removed by running the "Maintenance programme" without a load. This programme is designed for cleaning the wash cabinet using care products such as Miele's dishwasher cleaner or conditioner (see "Optional accessories - Dishwasher care products). Please follow usage instructions on the packaging.

Check your dishwasher regularly (approx. every 4-6 months). This way faults and problems can be avoided.

⚠ The external surfaces of this appliance are all susceptible to scratching.
Contact with unsuitable cleaning agents can alter or discolour the external surfaces.

Cleaning the wash cabinet

The wash cabinet is largely self-cleaning, provided that the correct amount of detergent is always used.

If there are nevertheless limescale or grease deposits in the cabinet, these can be removed with the Original Miele dishwasher conditioning agent (available from Miele or at www.miele-shop.com). Follow the dosage recommended by the manufacturer on the packaging.

Using mainly low temperature programmes (below 50°C), could cause bacteria and unpleasant odours to build up in the wash cabinet. To avoid this, the dishwasher will increase the temperature in the final rinse of the selected programme automatically after several programmes using low temperatures have been run.

- Clean the filters in the wash cabinet regularly.

Cleaning the door and the door seal

Mould could build up on the door seal and the sides of the dishwasher door as these surfaces are outside the wash cabinet and are not accessed and cleaned by the spray arm jets.

- Wipe the door seals regularly with a damp cloth to remove food deposits.
- Wipe off any food or drink residues which may have dripped onto the sides of the dishwasher door before closing it.

Cleaning the door front

⚠ Soiling that is left too long might become impossible to remove and could cause external surfaces to alter or discolour.
Remove any soiling immediately.

- Clean the front with a solution of warm water and a little washing-up liquid applied with a soft sponge. Wipe the surfaces dry using a soft cloth.
  For cleaning, you can also use a clean, damp microfibre cloth, such as the Original Miele all purpose microfibre cloth, without any cleaning agent.

To avoid damaging external surfaces, do not use:

- cleaning agents containing soda, ammonia, acids or chlorides,
- cleaning agents containing descaling agents,
- abrasive cleaning agents, e.g. powder cleaners and cream cleaners,
- solvent-based cleaning agents,
- stainless steel cleaning agents,
- dishwasher cleaner,
- oven cleaner,
- glass cleaning agents,
- hard, abrasive brushes or sponges, e.g. pot scourers, brushes or sponges which have been previously used with abrasive cleaning agents,
- dirt erasers,
- sharp metal scrapers,
- steel wool or metal scourers,
- steam cleaning appliances.

Checking the filters in the wash cabinet

The filter combination in the base of the wash cabinet retains coarse soil from the suds solution, preventing it accessing the circulation system and re-entering the cabinet through the spray arms.

⚠ This dishwasher must not be used without all the filters in place.

Collection of coarse soil may cause the filters to clog. The level of soiling and time it takes before the filters need cleaning will vary depending on use.

The message Check filters will appear in the display after every 50 programme cycles (factory default setting).

You can set the interval for this message to appear to between 30 and 60 programme cycles (see "Settings menu - Check filters").

- Check the filter combination.
- Clean it if necessary.
- Then confirm the message with *OK*.

The message will go out.

Cleaning the filters

- Switch the dishwasher off.

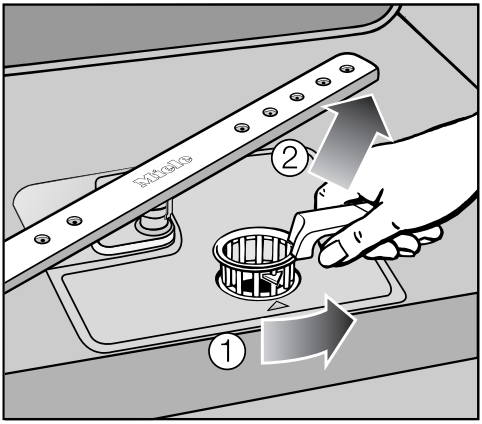

- Turn the handle anti-clockwise to release the filter combination ①.
- Lift the filter combination out of the dishwasher ②. Remove any coarse particles and rinse the filter well under running water.
  Use a nylon brush if necessary.

⚠ During cleaning ensure that course soil doesn't get into the circulation system and cause a blockage.

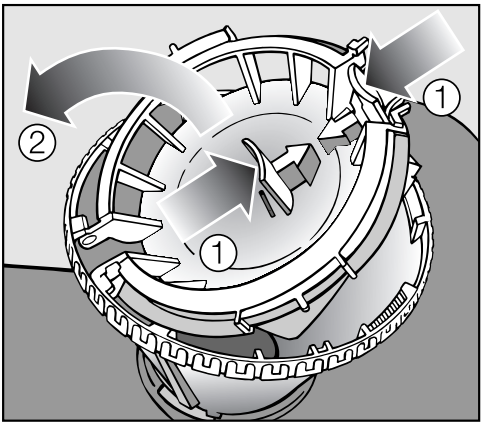

To clean the inside of the filter, the flap must be opened:

- Press the catches ① together in the direction of the arrows as shown, and open the filter ②.
- Rinse all the filters under running water.
- Then close the flap so that the catch engages.

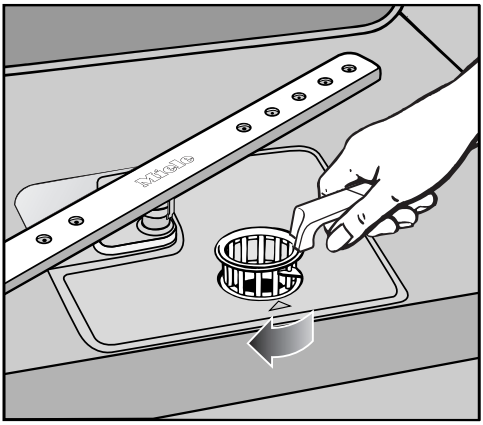

- Replace the filter combination so that it lies flat in the base of the wash cabinet.
- Then turn the handle clockwise until both arrows point towards each other. This will lock the filter combination in place.

⚠ Take care when you are fitting the filter combination that it is secured in position correctly.
Otherwise coarse soil could get into the circulation system and cause a blockage.

Cleaning the spray arms

Particles of food can get stuck in the spray arm jets and bearings. The spray arms should therefore be inspected and cleaned regularly (approx. every 4 - 6 months).

- Switch the dishwasher off.

Remove the spray arms as follows:

- Take out the cutlery tray (if your dishwasher is fitted with one).
- Push the **top** spray arm upwards to engage the inner ratchet. Then unscrew the spray arm.

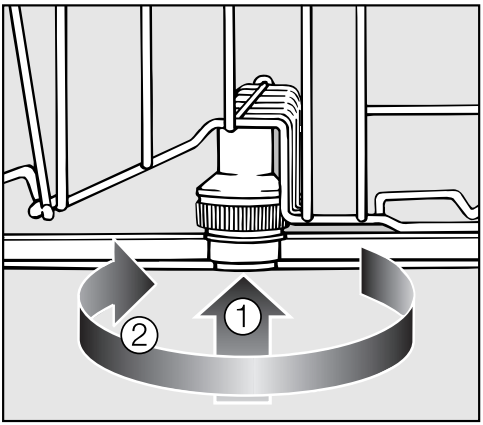

- Push the **middle** spray arm upwards ① to engage the ratchet. Then unscrew the spray arm ②.
- Remove the lower basket.

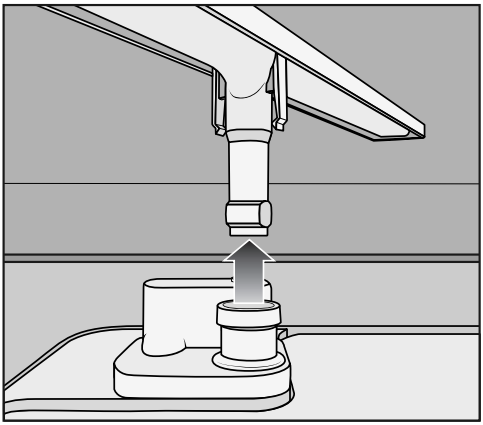

- Pull the **lower** spray arm firmly upwards to remove it.

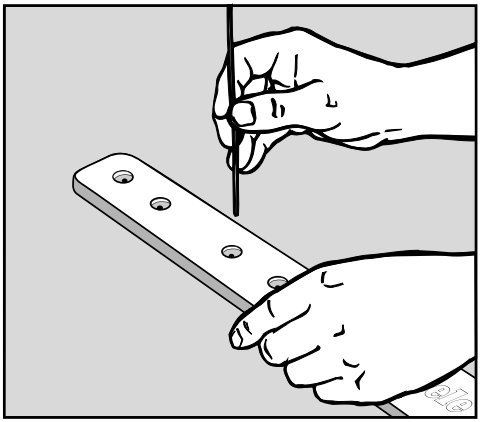

- Use a pointed object to push food particles into the spray arm jets.
- Rinse thoroughly under running water.
- Refit the spray arms and check that they rotate freely.

Problem solving guide

With the help of the following guide, minor faults in the performance of the appliance, some of which may result from incorrect operation, can be put right without contacting Miele. This will save time and money.

Please note that a call-out charge will be applied to unnecessary service visits where the problem could have been rectified as described in these operating instructions.

⚠ Unauthorised or incorrect repairs could cause personal injury or damage to the appliance.
Repair work to electrical appliances must only be carried out by a suitably qualified and competent person in strict accordance with current local and national safety regulations. The manufacturer cannot be held liable for unauthorised work.

Technical problems

Problem	Possible cause and remedy
The display remains dark and the *Start* indicator light is not flashing after the dishwasher has been switched on with the ⏻ button.	The appliance is not plugged in. ■ Insert the plug and switch on at the socket.
	The mains fuse has tripped. ■ Reset or replace the fuse (see data plate for minimum fuse rating).
The dishwasher stops during a programme.	The mains fuse has tripped. ■ Reset or replace the fuse (see data plate for minimum fuse rating). ■ If the mains fuse trips again, call Miele.
The time display is flashing with the door shut. The programme has not started.	The door has not closed properly, because it had not been fully opened after the door had been opened automatically. ■ Open the door fully so that the door catch rail retracts again. ■ Then close the door.

Problem	Possible cause and remedy
One of the following messages appears in the display:	Before rectifying the problem, you must: ■ Switch the dishwasher off with the ⏻ button.
⚠ Fault FXX	There may be a technical fault. After a few seconds: ■ Switch the dishwasher back on. ■ Select the programme you want. ■ Press the *Start* button. If the fault message appears again, there is a technical fault. ■ Call Miele.
Waterproof	The Waterproof system has reacted. ■ Turn off the tap. ■ Call Miele.
⚠ Fault F78	A fault has occurred in the circulation pump. ■ Switch the dishwasher off for at least 30 seconds with the ⏻ button. ■ Switch the dishwasher back on. ■ Select the programme you want. ■ Press the *Start* button. If the fault message appears again, there is a technical fault. ■ Call Miele.

Water inlet fault

Problem	Possible cause and remedy
One of the following messages appears in the display:	
Open stopcock	The tap is turned off. ■ Turn on the tap fully.
Water intake	Before rectifying the problem, you must: ■ Switch the dishwasher off with the ⏻ button.
	Water intake is restricted. ■ Turn on the tap fully and start the programme again. ■ Clean the water inlet filter (see "Maintenance"). ■ The water pressure at the intake is lower than 50 kPa (0.5 bar). Seek professional advice.
The following message appears in the display during the SolarSave **programme:** ℹ Intake temp. low	The intake water has not reached the required temperature of 45°C (see "Water connection - Connection to the water supply"). ■ Start the programme again. ■ If the fault message appears again, select a different programme.

Water drainage fault

Problem	Possible cause and remedy
The following fault message appears in the display: Drain	Before rectifying the problem, you must: ■ Switch the dishwasher off with the ⏻ button.
	The water outlet is restricted. There might be water in the wash cabinet. ■ Clean the filter combination (see "Cleaning and care - Cleaning the filters"). ■ Clean the drain pump (see "Maintenance"). ■ Clean the non-return valve (see "Maintenance"). ■ Remove any kink or loop in the drain hose.

General problems

Problem	Possible cause and remedy
The indicator lights and display are dark.	The display has switched off automatically to save energy. ■ Switch the dishwasher on again with the ⏻ button.
The interior lighting doesn't switch on when the door is opened.	The interior lighting has been switched off permanently. ■ Switch the lighting back on again (see "Settings menu - BrilliantLight").
The following fault message appears in the display: Salt reservoir lid	The salt reservoir lid has not been closed properly. ■ Close the salt reservoir lid.
	If the salt reservoir lid has opened during a programme: ■ Switch the dishwasher off and on again with the ⏻ button. ■ Close the salt reservoir lid. ■ Start the programme again.
Detergent residue is left in the dispenser at the end of a programme.	The dispenser was still damp when detergent was added. ■ Make sure the dispenser is dry before adding detergent.
The detergent dispenser lid cannot be closed properly.	Clogged detergent residue is blocking the catch. ■ Clean the detergent from the catch.
At the end of a programme there is a film of moisture on the inside of the door and the interior walls.	This is caused by the drying system and does not indicate a fault. The moisture will dissipate after a while.

Problem	Possible cause and remedy
Water remains in the wash cabinet at the end of a programme.	Before rectifying the problem you must: ■ Switch the dishwasher off with the ⏻ button.
	The filter combination in the wash cabinet is clogged. ■ Clean the filter combination (see "Cleaning and care - Cleaning the filters").
	The drain pump or non-return valve may be blocked. ■ Clean the drain pump or the non-return valve (see "Maintenance").
	The drain hose is kinked. ■ Remove any kink from the drain hose.

Noises

Problem	Possible cause and remedy
Knocking noise in the wash cabinet.	A spray arm is knocking against an item in a basket. ■ Interrupt the programme, and rearrange the items which are obstructing the spray arm.
Rattling noise in the wash cabinet.	Items of crockery are insecure in the wash cabinet. ■ Interrupt the programme, and rearrange the items of crockery.
	A foreign object (e.g. a cherry stone) has become lodged in the drain pump. ■ Remove the foreign object from the drain pump (see "Maintenance - Cleaning the drain pump and non-return valve").
Knocking noise in the water pipes.	This may be caused by the on-site installation or the cross-section of the piping. ■ This has no influence on dishwasher function. If in doubt, contact a suitably qualified plumber.

Unsatisfactory washing result

Problem	Possible cause and remedy
The dishes are not clean.	The dishes were not loaded correctly. ■ See notes in "Loading the dishwasher".
	The programme was not powerful enough. ■ Select a more intensive programme (see "Programme chart").
	There is some stubborn soiling although most of the crockery is only lightly soiled (e.g. with tea stains). ■ Use the Automatic programme option (see "Settings menu - Automatic").
	Not enough detergent was dispensed. ■ Use more detergent, or change your detergent.
	Items are blocking the path of the spray arms. ■ Rearrange the items so that the spray arms can rotate freely.
	The filter combination in the base of the wash cabinet is not clean or is not correctly fitted. This may cause the spray arm jets to get blocked. ■ Clean and/or fit the filter combination correctly. ■ Clean the spray arm jets if necessary (see "Cleaning and care - Cleaning the spray arms").
	The non-return valve is open and blocked. Dirty water has flowed back into the wash cabinet. ■ Clean the drain pump and the non-return valve (see "Maintenance").
Smearing appears on glassware and cutlery, there is a bluish sheen on the surface of glassware; film can be wiped off.	The rinse aid dosage is set too high. ■ Reduce the dosage (see "Settings menu - Rinse aid").

Problem solving guide

Problem	Possible cause and remedy
Dishes, cutlery and glasses are not dry or are flecked.	The amount of rinse aid may be insufficient, or the rinse aid reservoir is empty. ■ Replenish the reservoir, increase the dosage or change the brand of rinse aid (see "Before using for the first time - Rinse aid").
	Crockery was taken out of the cabinet too soon. ■ Leave it in for longer (see "Operation").
	Combination tabs have been used which have impaired drying performance. ■ Change your detergent, or replenish the rinse aid (see "Before using for the first time - Rinse aid").
Glassware has a brown or blue tinge, and film cannot be wiped off.	This may be caused by the detergent. ■ Change your detergent.
Glassware is dull and discoloured; film cannot be wiped off.	The glassware is not dishwasher-proof. The surfaces are affected. ■ There is no remedy. Purchase glassware which is dishwasher-proof.
Tea or lipstick stains have not been completely removed.	The wash temperature of the selected programme was too low. ■ Select a programme with a higher wash temperature.
	The bleaching effect of the detergent used is too low. ■ Change your detergent.
Plastic items are discoloured.	Natural dyes e.g. from carrots, tomatoes or tomato sauce may be the cause. The amount of detergent used or its bleaching effect was not sufficient to deal with natural dyes. ■ Use more detergent (see "Operation - Detergent"). Discolouration is irreversible.

Problem	Possible cause and remedy
White residue is visible on cutlery and crockery, clouding occurs on glassware; film can be wiped off.	Not enough rinse aid was used. ■ Increase the dosage (see "Settings menu - Rinse aid").
	There is no salt in the salt reservoir. ■ Fill the salt reservoir (see "Before using for the first time - Dishwasher salt").
	An unsuitable combination detergent has been used. ■ Change your detergent. Use a standard liquid, tablet or powder detergent, and fill the salt and rinse aid reservoirs in the dishwasher.
	The water softener is programmed to too low a water hardness level. ■ Programme the water softener to a higher water hardness level (see "Settings menu - Water hardness").
There are rust stains on cutlery.	The affected items are not corrosion resistant. ■ There is no remedy. Purchase cutlery which is dishwasher-proof.
	A programme was not run after dishwasher salt was added. Traces of salt have got into the wash cycle. ■ Always run the *QuickPowerWash* programme with the *Short* programme option selected and without any crockery in the dishwasher after adding dishwasher salt.

Cleaning the water inlet filter

A filter is incorporated in the screw connection of the valve on the water inlet hose. The filter must be cleaned when dirty, otherwise insufficient water flows into the wash cabinet.

⚠ The plastic housing of the water connection contains an electrical component.
The housing must not be dipped in water.

Recommendation

If the mains water contains a large amount of insoluble substances, we recommend fitting a large-area filter in the connection between the tap and the water inlet hose threaded union. This filter is available from Miele.

Cleaning the filter:

- Disconnect the dishwasher from the mains supply.
  Switch off at the mains socket and withdraw the plug.
- Turn off the tap.
- Unscrew the inlet hose.

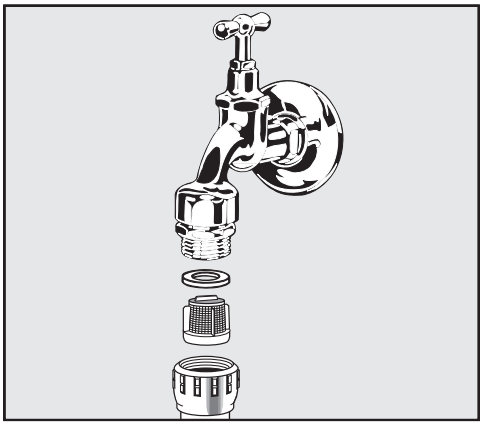

- Carefully remove the washer.
- Withdraw the filter using pointed pliers and rinse clean under running water.
- Replace the filter and washer, making sure they are sitting correctly.
- Reconnect the inlet hose to the tap, making sure it goes on correctly and is not cross-threaded.
- Turn on the tap.

If water leaks out, the inlet hose may not be connected securely or it may have been screwed on at an angle.

- Unscrew and reconnect the inlet hose correctly.

Cleaning the drain pump and non-return valve

If the water has not been pumped away at the end of a programme, the drain pump or the non-return valve might be blocked. They are, however, easy to clean.

- Disconnect the dishwasher from the mains supply. Switch off at the mains socket and withdraw the plug.
- Take the filter combination out of the wash cabinet (see "Cleaning and care - Cleaning the filters").
- Scoop the water out of the cabinet using a suitable container or utensil.

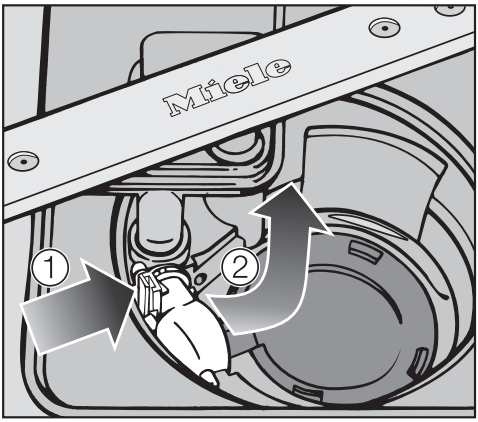

- Press the catch for the non-return valve inwards ①.
- Tilt the non-return valve inwards until it is released ②.
- Rinse it thoroughly under running water and remove any soiling from the non-return valve.

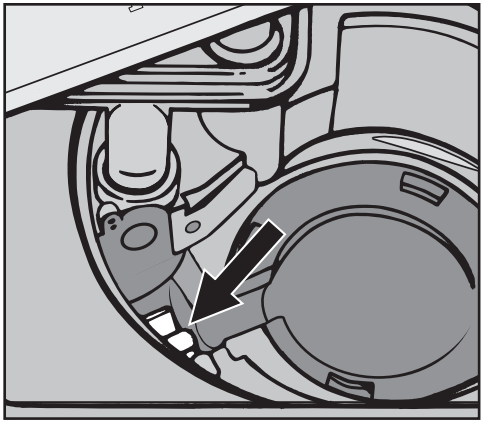

The drain pump is situated under the non-return valve (see arrow).

- Remove all foreign objects from the drain pump (watch out for glass or bone splinters which are particularly difficult to detect and could cause injury). Turn the drain pump impeller by hand to check that there are no more obstructions. You will feel a little resistance when you turn the impeller.
- Carefully refit the non-return valve and secure it with the catch.

⚠ Ensure that the catch engages correctly.

⚠ Be careful not to damage any delicate components when cleaning the drain pump and the non-return valve.

Repairs

In the event of any faults which you cannot remedy yourself, please contact Miele.

The contact details for Miele are given at the back of these instructions.

When contacting Miele, please quote the model and serial number of your dishwasher, both of which are shown on the data plate on the right-hand side of the door.

Warranty

The manufacturer's warranty for this appliance is 2 years.

For further information, please refer to your warranty booklet.

Dishwasher detergent and rinse aid, as well as cleaning and care products, are available as optional accessories.
All the products are designed for use with Miele dishwashers.

These and many other useful products can be ordered from Miele or via the Miele Webshop (see end of this booklet for contact details).

Dishwasher detergent, rinse aid and salt

When you decided to buy a Miele dishwasher, you chose excellent quality and performance. Ensuring that your dishwasher always delivers the best possible results will also depend on your choice of dishwasher detergent, rinse aid and dishwasher salt, as cleaning results can vary depending on the brand used.
With Miele cleaning products and detergents, you can be sure of optimum results as these products have been specially designed for Miele dishwashers.

Detergent tabs

- sparkling results even with stubborn food deposits
- combination product with other components such as rinse aid, salt and glass protection additives
- phosphate-free - safe for the environment
- water-soluble wrapping - no need to unwrap

Powder detergent

- with active oxygen for thorough cleaning
- with enzymes which are effective even in low temperature programmes
- with glass protection against corrosion

Rinse aid

- for gleaming glasses
- helps crockery to dry
- with glass protection against corrosion
- specially designed cap for precise, easy dispensing

Dishwasher salt

- prevents limescale on crockery and in the appliance
- extra coarse-grained

Dishwasher care products

Miele cleaning and care products provide optimum care for your dishwasher.

Dishwasher cleaner

- cleans the dishwasher effectively and thoroughly
- removes grease, bacteria and unpleasant odours
- ensures excellent dishwashing results

Dishwasher descaler

- removes heavy limescale deposits
- mild and gentle with natural citric acid

Dishwasher conditioner

- removes odours, limescale and light deposits
- maintains the elasticity and leak tightness of the seals

Dishwasher freshener

- neutralises unpleasant odours
- fresh, pleasant lime and green tea scent
- easy to attach to the dishwasher basket
- very economical, lasts for 60 wash cycles

This dishwasher is supplied with a mains cable with moulded plug ready for connection to an AC single phase supply, (230 - 240 V 50 Hz for NZ and Australia) via a suitable switched socket.

⚠ The electrical socket must be easily accessible after the dishwasher has been installed. Do not connect the dishwasher to the mains electricity supply by an extension lead. Extension leads do not guarantee the required safety of the appliance (e.g. danger of overheating).

Do not connect the appliance solely to an inverter such as those used with an autonomous energy source e.g. **solar power**. When switched on, peak loads in the system can cause the safety switch-off mechanism to be triggered. This can damage the electronic unit. The machine must not be used with so-called **energy-saving devices** either. These reduce the amount of energy supplied to the machine, causing it to overheat.

⚠ Before connecting the appliance, check that the connection data on the data plate (voltage, frequency, rated load and fuse rating) matches the mains electricity supply. If in any doubt, consult a qualified electrician.

The data plate is located on the right-hand side of the door.

⚠ All electrical work must be carried out by a suitably qualified and competent person in strict accordance with current local and national safety regulations.

For extra safety, it is advisable to install a residual current device (RCD), with a trip current of 30 mA.

The Miele Waterproof system

As long as your dishwasher has been installed correctly, the Miele waterproof anti-leak system will protect you from water damage.

Connection to the water supply

⚠ Water in the dishwasher must not be used as drinking water.

– The dishwasher may be connected to a cold or hot water supply, max. 60°C.
  We would only recommend connection to a hot water supply if it is economical, e.g. a solar powered supply. When connected to a hot water supply, all programmes will be carried out with hot water.

– The SolarSave programme (if available) requires a hot water supply of between 45°C (minimum) and 60°C (maximum).
  The higher the water intake temperature, the better the cleaning and drying results.

- The inlet hose is approx. 1.5 m long.
- A tap with a 3/4" male thread must be provided on site.
- IMPORTANT: Australia and New Zealand
  This appliance must be installed according to AS/NZS 3500.1. Back flow prevention is already integrated in the appliance.
- The water pressure (flow pressure at the take-off point) must be between 50 and 1000 kPa (0.5 and 10 bar). If the water pressure is lower than this, the fault message Water intake will appear in the display (see "Problem solving guide"). If the water pressure is too high, a pressure reducer valve must be fitted.

After connecting the dishwasher to the water supply, check that all plumbing connections are watertight.

⚠ To avoid any damage to the appliance, the dishwasher must only be operated when it is connected to a fully vented plumbing system.

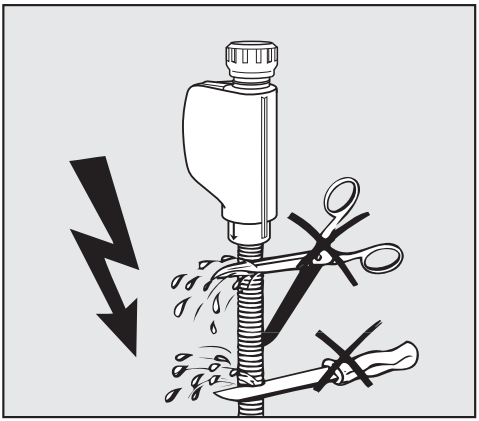

⚠ The inlet hose must not be shortened or damaged in any way as it contains electrical components (see illustration).

Drainage

- The appliance drainage system is fitted with a non-return valve which prevents dirty water from flowing back into the dishwasher via the drain hose.
- The dishwasher is supplied with approx. 1.5 m of flexible drain hose with an internal diameter of 22 mm.
- The drain hose can be extended using a connection piece to attach a further length of hose. The drainage length must not be longer than 4 m, and the delivery head must not exceed 1 m.
- If the hose is to be directly fitted to the drainage outlet on site, use the hose clip supplied (see installation diagram).
- The hose can be directed to the left or the right of the appliance.
- The on-site connector for the drain hose can be adapted to different widths of hose. If the connector protrudes too far into the drain hose, it will need to be shortened. Otherwise the drain hose may become blocked.
- The drain hose must not be shortened.

⚠ Make sure that there are no kinks in the hose, and that it is not squashed or stretched.

After commissioning the appliance, ensure that the water outlet does not leak.

Venting the drainage system

If the on-site drain connection is situated lower than the guide path for the bottom basket rollers in the open door, the drainage system must be vented. Otherwise a siphoning effect during a programme can cause the appliance to empty itself of water.

■ To vent it: Open the dishwasher door fully.

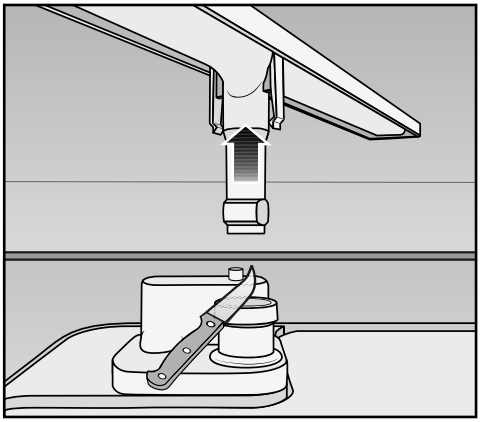

■ Pull the lower spray arm firmly upwards to remove it.

■ Cut off the top of the vent valve in the wash cabinet.

Technical data

Dishwasher model	Standard	XXL
Height freestanding model	84.5 cm (adjustable + 3.5 cm)	-
Height built-in model	80.5 cm (adjustable + 6.5 cm)	84.5 cm (adjustable + 6.5 cm)
Height of building-in recess	Min. 80.5 cm (+ 6.5 cm)	Min. 84.5 cm (+ 6.5 cm)
Width	59.8 cm	59.8 cm
Width of building-in recess	60 cm	60 cm
Depth freestanding model	60 cm	-
Depth built-in model	57 cm	57 cm
Weight	Max. 64 kg	Max. 56 kg
Voltage	See data plate	
Rated load	See data plate	
Fuse rating	See data plate	
Power consumption when switched off	0.2 W	0.2 W
Power consumption when not switched off	2.5 W	2.5 W
Networked standby	0.6 W	0.6 W
Test certificates awarded	See data plate	
Water pressure (flow rate)	50 - 1000 kPa (0.5 - 10 bar)	50 - 1000 kPa (0.5 - 10 bar)
Hot water connection	Up to max. 60 °C	Up to max. 60 °C
Delivery head	Max. 1 m	Max. 1 m
Drainage length	Max. 4 m	Max. 4 m
Mains cable	Approx. 1.9 m	Approx. 1.9 m
Capacity	14 place settings	15 place settings

Settings menu for changing standard settings

Opening the Settings menu

- Switch the dishwasher on with the ⏻ button if it is switched off.
- Use the programme selector button ∨ to select the *Further* ⧉ option.

The first of the further programmes will appear in the display.

- Select the Settings ⚑ option with the ∨∧ arrow buttons and confirm with *OK*.

The first option in the Settings menu will appear in the display.

To learn about the display, read the section with the same name.

- Use the ∨∧ arrow buttons to select the option you want to change and confirm your selection with *OK*.

Sub-menu options which have already been selected will have a tick ✓ beside them.

- To exit a sub-menu, use the ∨∧ arrow buttons to select Back ⮌ and confirm with *OK*.

The display will revert to the menu above.

Language ⚑

The display can be set to appear in one of several different languages.

You can change the language in the display via the Language ⚑ sub-menu.

- Select the language you want as well as the country, if appropriate, and confirm with *OK*.

The flag after the word Language ⚑ acts as a guide if a language which you do not understand has already been set.
If this is the case, keep selecting the option which has a flag after it until you reach the Language ⚑ sub-menu.

Time of day

The dishwasher is delivered with the time of day (clock) display deactivated.

To save energy, the dishwasher will switch off automatically a few minutes after the last time a button has been pressed or after the end of a programme.

Setting the time of day (clock) display

When the time of day (clock) display has been activated, the current time of day will appear in the display a few minutes after the last time a button has been pressed or after the end of a programme. This increases energy consumption.

- Select the Display option and confirm with *OK*.
- Select the setting you want and confirm with *OK*.
- If you have selected On, confirm the message about higher energy consumption with *OK*.

Setting the clock format

You can select either a 24-hour or 12-hour clock.

- Select the Clock format option.
- Select the setting you want and confirm with *OK*.

Setting the time of day

You can set the current time of day. The current time of day must be set before you can use the "FlexiTimer" programme option.

- Select the Set option.
- Set the hour with the ∨∧ arrow buttons and confirm with *OK*. Then set the minutes and confirm with *OK*.

The time of day has now been saved.

Water hardness

This appliance is fitted with a water softener.
The dishwasher must be programmed for the water hardness in your area.

- The dishwasher must be programmed to the correct water hardness for your area.
- Your local water authority will be able to advise you of the water hardness level in your area.
- Where the water hardness fluctuates e.g. between 1.8 and 2.7 mmol/l (10 - 15 °d - German scale), always programme the dishwasher to the higher value (2.7 mmol/l or 15 °d in this example).

■ Select the water hardness level for your area and confirm your selection with *OK*.

A tick ✓ will appear beside the water hardness which has been set.

°d	mmol/l	°f	Display
1	0.2	2	1
2	0.4	4	2
3	0.5	5	3
4	0.7	7	4
5	0.9	9	5
6	1.1	11	6
7	1.3	13	7
8	1.4	14	8
9	1.6	16	9
10	1.8	18	10
11	2.0	20	11
12	2.2	22	12
13	2.3	23	13
14	2.5	25	14
15	2.7	27	15
16	2.9	29	16
17	3.1	31	17
18	3.2	32	18
19	3.4	34	19
20	3.6	36	20
21	3.8	38	21
22	4.0	40	22
23	4.1	41	23
24	4.3	43	24
25	4.5	45	25
26	4.7	47	26
27	4.9	49	27
28	5.0	50	28
29	5.2	52	29
30	5.4	54	30
31	5.6	56	31
32	5.8	58	32
33	5.9	59	33
34	6.1	61	34
35	6.3	63	35
36	6.5	65	36
37-45	6.6-8.0	66-80	37-45
46-60	8.2-10.7	82-107	46-60
61-70	10.9-12.5	109-125	61-70

Rinse aid

You can adjust the rinse aid dosage for best results.
The rinse aid dosage is set in stages from 0 to 6.
It is set to 3 at the factory.

If the "Adjust Automatic" programme function (depending on model) has been activated, the amount of rinse aid dispensed in the *Automatic* programme can be higher than that set.

If spots appear on crockery and glassware:

– Increase the rinse aid dosage.

If clouding or smearing appears on crockery and glassware:

– Decrease the rinse aid dosage.

■ Select the setting you want and confirm your choice with *OK*.

Consumption (EcoFeedback)

You can programme the dishwasher so that the energy and water consumption of the currently selected programme appears in the display. The estimated consumption can be displayed before the programme starts and the actual consumption can be displayed after the programme has finished.
In this menu you can also call up the total energy and water used in all previous dishwasher programmes (see "Caring for the environment - EcoFeedback consumption indicator").

Consumption indicator

■ Select the Display option and confirm with *OK*.

■ Select the setting you want and confirm with *OK*.

Total consumption

■ Select the Total consumption option and confirm with *OK*.

■ You can call up the values for Energy and Water with the ∨∧ arrow buttons.

You can also reset the values for the total consumption to 0.

■ Select the Reset option and confirm with *OK*.

■ Select the Yes option and confirm with *OK*.

■ Confirm the message with *OK*.

The values are now reset to 0.

EcoStart

In order to run your dishwasher in the most economical way, you can use the EcoStart option to take advantage of your electricity supplier's time variable tariffs (see "Programme options - FlexiTimer with EcoStart").
With this option selected, your dishwasher will start automatically at your electricity supplier's cheapest tariff times.

To use this option, you must first set up to three electricity tariff time zones in which the dishwasher can start. You can allocate different priorities to these time zones. The time with the cheapest electricity tariff will be given Priority 1.

Contact your electricity supplier to find out the times of the cheapest electricity tariffs.

Once the electricity tariff times have been set, you can use the EcoStart option to set the latest finish time required for each programme.
The dishwasher will then start automatically in the cheapest electricity tariff time and the programme will end at the latest at the finish time set.

Setting the electricity tariff times

Before you can use the EcoStart option, you must set at least one electricity tariff time.

- Use the ∨∧ arrow buttons to select the electricity tariff time (T1-T3) you want to set and confirm with *OK*.

The start of the electricity tariff time selected will appear in the display and the hour number block will be highlighted.

- Use the ∨∧ arrow buttons to set the hours and minutes for the start time and confirm both with *OK*.

The end of the electricity tariff time selected will appear in the display and the hours number block will be highlighted.

- Use the ∨∧ arrow buttons to set the hours and minutes for the end time and confirm both with *OK*.

The electricity tariff time will be saved and its priority will appear in the display.

- Use the ∨∧ arrow buttons to set the priority you want and confirm with *OK*.
- Confirm the message with *OK*.

The electricity tariff time will be activated.

Changing the electricity tariff times

You can change the start, finish or priority of an electricity tariff time.

- Use the ∨∧ arrow buttons to select the electricity tariff time (T1-T3) you want to change and confirm with *OK*.
- Select the setting you want to change and confirm with *OK*.
- Use the ∨∧ arrow buttons to change the setting and confirm with *OK*.
- Confirm the message with *OK*.

The change will be saved.

Deleting the electricity tariff times

- You can delete the settings for an electricity tariff time and in doing so deactivate the EcoStart option for this time zone.
- Use the ∨∧ arrow buttons to select the electricity tariff time (T1-T3) you want to delete and confirm with *OK*.
- For example, select Delete T1 and confirm with *OK*.
- For example, select Delete T1? and confirm with *OK*.

The settings for the electricity tariff time selected will be reset.

- Confirm the message with *OK*.

The electricity tariff time has now been deleted.

Networking

Your dishwasher is equipped with an integrated Wi-Fi module.

In order to connect your dishwasher to your Wi-Fi network, you must first activate the network function.

This will add the Miele@home option to the "Settings" menu.

Networking is deactivated ex-works.

Make sure that your Wi-Fi network signal strength is strong enough at the installation site of your dishwasher.

- Select the setting you want and confirm with *OK*.

Miele@home

This option is only displayed if you have activated the network settings (see "Settings, Networking").

There are a number of ways of connecting your dishwasher to your Wi-Fi network:

Miele@mobile App (only functional in selected countries)

The Miele@mobile App can be used to connect to your network.

- Download the Miele@mobile App from one of the App stores.
- Follow the instructions in the App.

WPS Push Button

As an alternative to networking your dishwasher via the Miele@mobile App we recommend using WPS (Wireless Protected Setup). To do so, you will need a WPS-compatible router.

- Select the WPS push button option.

Please wait will appear in the display.

- Activate the "WPS" function on your router within two minutes.
- Once connection has been made, confirm the message with *OK*.

The dishwasher will then revert to the Miele@home menu.

If the connection fails, you have probably not connected WPS to your router quickly enough. Repeat the steps above.

SmartStart
(only functional in selected countries)

The SmartStart function is used for starting your dishwasher automatically at a time when your energy costs are most economical.

If you have activated SmartStart Permitted, the"FlexiTimer" ⏲ menu for the programme selected will no longer show the EcoStart option. Instead it will show SmartStart. The dishwasher will then start within the timeframe set by you once it receives a signal from your energy provider.
If you have not received a signal from your energy provider by the latest start time entered, the dishwasher will start automatically.

- Select the setting you want and confirm with *OK*.
- Confirm the message with *OK*.

Remote control

Once you have installed the Miele@mobile App on your tablet PC or your Smartphone, you will be able to operate your dishwasher remotely. Your dishwasher must be signed on to a Wi-Fi network and the Remote control function must be activated.

- Select the setting you want and confirm with *OK*.
- Use the Back ⮌ option to get into the Settings ⚑ menu.
- Use Finish to leave the Settings ⚑ menu.
- Use the programme selector button ∨ to select the *Further* ⧉ option again.

Once you have activated the Remote control function, the MobileControl option will be listed under *Further* ⧉.

In order to operate the dishwasher with the Miele@mobile App, please activate the MobileControl function.

- Confirm the MobileControl option with *OK*.
- Close the door and press the *Start* button.

The *Start* indicator light will come on and Remote ctrl active will appear in the display.

The dishwasher can now be operated remotely using the Miele@mobile App.

If the time of day (clock) display has been switched off (see "Settings menu, Time of day") the display will go out if you have activated a Delay start time or remote control after a few minutes and only the *Start* indicator light will flash slowly.

Press any button to switch the display back on again for a few minutes.

If you now do not wish to operate the dishwasher remotely with the Miele@mobile App, you can cancel the MobileControl function.

- Switch the dishwasher off with the ⏻ button.

System settings

You can use this option to sign your dishwasher on to an existing Miele@home network or create a Miele@home network with your dishwasher.

For instructions on how to do so, please read your Miele@home instruction manual. This is available to download as a pdf from www.miele-at-home.de.

Module settings

We recommend connecting your dishwasher to your Wi-Fi network with the help of the Miele@mobile App or via WPS.

If you would rather set up the connection to your router yourself, or you have a special network configuration, you can enter the relevant settings using the necessary technical knowledge.

Starting module activity

If you wish to reset all entered settings and values for Miele@home, you can restore the factory default settings on your Wi-Fi module. Any settings which do not affect Miele@home will remain unchanged.

- Select Default settings and confirm with *OK*.

Please wait will appear in the display.

The message Module status: Process successful will appear in the display after a few minutes.

- Confirm the message with *OK*.

The Wi-Fi module factory default settings have been restored.

If the factory default settings were not restored to your Wi-Fi module, repeat the instructions above.

Soak

You can use this function to loosen dried-on food residues in the programme selected.
Once activated, this function will be carried out with all programmes until you deactivate it.
If you are using powder dishwasher detergent, add approx. 5 g to compartment I.

- Select the setting you want and confirm with *OK*.

Pre-wash

You can use this function to remove easily loosened food residues in the programme selected.
Once activated, this function will be carried out with all programmes until you deactivate it.

- Select the setting you want and confirm with *OK*.

Brightness

There are seven different display brightness settings.

- Select the brightness you want and confirm this with *OK*.

Switching off the refill reminders

If you only ever use multi-function combination products containing salt and rinse aid in your dishwasher, you can switch the refill reminders for salt and rinse aid off if you wish. Doing so will not affect the DetergentAgent function (see "Programme options - DetergentAgent").

- Select the setting you want and confirm with *OK*.

If you switch to using detergent that does not contain salt or rinse aid, it is important to remember to add dishwasher salt and rinse aid and to switch the reminders back on.

Check filters

You can adjust the interval at which the message to remind you to check the filters appears.
You can set an interval of between 30 and 60 programme cycles.

The "Check filters" message is set at the factory to appear after every 50 programme cycles.

- Select the interval you want and confirm this with *OK*.

Automatic

You can adjust the *Automatic* programme so that it will remove stubborn soiling from an otherwise lightly soiled load. This will increase energy consumption.

- Select the setting you want and confirm with *OK*.

AutoOpen

At the end of programmes with a drying phase the door will open automatically a little in order to help the drying process (see "Programme chart").
In the ECO programme the door will open automatically during the drying phase. In the QuickPowerWash programme it will open a few minutes after the programme has finished.

This function can be deactivated if wished.

- Select the setting you want and confirm with *OK*.

⚠ If you have deactivated the automatic door opening function but would still like to open the door at the end of the programme, then make sure that you open the door fully. Otherwise steam from the dishwasher could damage the edge of the worktop because the fan is no longer running.

BrilliantLight

This dishwasher has interior lighting. When the door is open, the lighting will switch off automatically after 15 minutes.

The interior lighting can be switched off permanently.

- Select the setting you want and confirm with *OK*.

Software version

You can call up the electronic software version of your dishwasher for technical support purposes.

■ Confirm the display with *OK*.

Showroom programme

For demonstration purposes only.

The dishwasher is fitted with various demonstration programmes for showroom use.

– Demo mode
  Demonstration programme for showrooms.

– Demo with sound
  This programme activates the circulation pump to demonstrate the sound of the dishwasher.

– Demo AutoOpen
  The door will open automatically.

– Cont. BrilliantLight
  The interior lighting is on constantly.

Factory default settings

You can reset all dishwasher settings to the factory default settings.

Wi-Fi module settings have to be reset separately.

■ Select Reset and confirm with *OK*.

Closing the Settings menu

You can exit the Settings menu using Finish.

■ Select Finish and confirm with *OK*.

The programme selected will appear in the display briefly and the indicator light for the programme selected will come on.

Miele Australia Pty. Ltd.
ACN 005 635 398
ABN 96 005 635 398

Miele Experience Centre and
Head Office Melbourne:
1 Gilbert Park Drive
Knoxfield, VIC 3180

Miele Experience Centre South Melbourne:
206-210 Coventry Street
South Melbourne, VIC 3205

Miele Experience Centre and Office Sydney:
3 Skyline Place
Frenchs Forest, NSW 2086

Miele Experience Centre and Office Brisbane:
39 Harvey Street North
Eagle Farm, QLD 4009

Miele Experience Centre Gold Coast:
131 Ferry Road
Southport, QLD 4215

Miele Experience Centre and Office Adelaide:
83-85 Sir Donald Bradman Drive
Hilton, SA 5033

Miele Experience Centre and Office Perth:
205-207 Stirling Highway
Claremont, WA 6010

1300 4 MIELE (1300 464 353)

www.miele.com.au

Miele New Zealand Limited
IRD 98 463 631

Head Office:
Level 2, 10 College Hill
Freemans Bay, Auckland 1011

Miele Experience Centre
Auckland:
8 College Hill
Freemans Bay, Auckland 1011
Telephone:
0800 464 353 (0800 4 MIELE)
www.miele.co.nz

Miele Global Headquarters
Germany
Miele & Cie. KG
Carl-Miele-Straße 29
33332 Gütersloh
Federal Republic of Germany

Miele

G 6822 / G 6827

CE

en-AU, NZ

M.-Nr. 10 601 520 / 03