60cm pyrolytic oven with food sensor probe, 9 oven functions with 45 built-in assisted cooking programs, pyrolytic self-cleaning functionality and sleek gloss black with stainless steel trim and handle design

Product Details

FEATURES

Food Sensor
Food Sensor to achieve perfect results with ease.

Pyroluxe Cleaning
Self-cleaning pyrolytic function turns food residue and grease into ash for easy cleaning.

Telescopic runners
Telescopic runners provide safe, easy access.

Intuitive LCD display

45 automatic programs

Soft-close doors
Soft Closing hinges are smooth and quiet.

Multi-level cooking

BENEFITS

PRECISION MEETS PERFECTION
The Food Sensor allows you to precisely monitor the cooking process and achieve perfect results according to your personal taste. The oven will let you know when your food has reached the right temperature.

CLEAN YOUR OVEN WITH EASE
The self-cleaning pyrolytic function takes all the effort out of keeping your oven clean. The oven is heated to a temperature that makes the grease and food residue turn to ash, which can then simply be wiped away with a damp cloth.

ACCESS ALL AREAS
Telescopic runners provide better access to dishes, making it easier to baste during cooking or check on progress. The runners also make it easier and safer when removing hot trays or heavy dishes.

CLOSE WITH A WHISPER
Soft Closing hinges ensure smooth and virtually silent door closure, for a premium feeling time after time.

Set up & stay ahead
Program the settings on your oven with ease and keep up with the progress of your meal with clarity, using the LCD display. The two-coloured display shows you time, temperature and the progress of what you are cooking, as well as access to other functions and settings to make the most out of your oven.

EXTRA-SAFE QUAD GLAZING
A quadruple glazed door offers top-tier insulation to keep the exterior cooler to the touch and enhance energy efficiency. An additional glass layer helps retain heat better, ideal for frequent or intensive cooking.

Specifications

PRODUCT PROFILE

Domestic warranty details (yrs)	5
Type of Oven	single pyrolytic oven
Oven fuel	electric
Materials/Colour	black
Controls of Oven	retractable control knobs
Cooling fan	Yes

DIMENSIONS

PRODUCT DIMENSION

Total height (mm)	594
Total width (mm)	595
Total depth (mm)	567

MAIN OVEN

Gross capacity litres	77
Useable capacity litres	71
Oven function	multifunction
Number of functions	9
Oven Functions	pizza,grill,conventional cooking,bottom heat,turbo grill,true fan cooking,frozen foods,moist fan baking,defrost

ELECTRICAL CONNECTION

Connected load KW	3.25
Maximum current rating (amps)	16
Type of connection	hardwired

MAIN OVEN

Oven liner	enamel
Timer functions	duration,end,minute minder,Auto off ,Cook time,End time,Time of day,24 hour clock,acoustic signal,Delayed start,function lock
Light wattage	40

OTHER FEATURES

Number of Programmed functions	45
Auto cook programs	Yes
Auto weight programs	Yes
Cleaning	pyrolytic
Pyrolytic functions	3
Type of Pyrolytic functions	quick (1hr),normal (1.5hr),intense (3hr)
Door	removable door,drop down,removable inner glass panes,cool door,Soft close
Timer	Programmable timer
Lights	1

SHIPPING

Shipping Volume (m3)	0.285
Shipping Weight (Kg)	36.5
Pack Dimensions Height (mm)	670
Pack Dimension Width (mm)	635
Pack Dimension Depth (mm)	670

OTHER FEATURES

Light wattage	40
Light position	top
Telescopic runners	two
Shelf support	side rack
Safety features	isofront plus quadruple glazed door
Closed door grilling	Yes
Included accessories	dripping pan,side racks,2 x chromed wire shelf,meat probe ,2 x baking trays,2 x telescopic runners
Layers of glass in door	4
Number of shelf positions	5
Food probe	Yes

Dimensions

Model:
OS6PB53ABE

UNDERBENCH

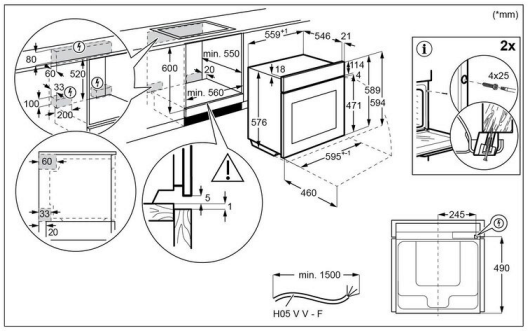

CABINET

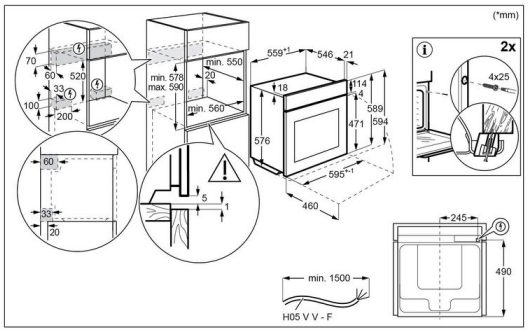

© 2025 Electrolux S.E.A PTE. LTD. AEG_IM_Diag_OS6PB53ABE_Oct25

Terms and Conditions

IMPORTANT

This is a guide of product dimensions only. For complete installation instructions, refer to the manual provided with product.

PRODUCT INFORMATION

The descriptors and illustrations in this publication apply to the specific products and models described as at the date of issue. Under our policy of continuous product development, product specifications may change without notice. Prospective purchasers should therefore check with their retailer to ensure this publication correctly describes the products that are being offered for sale. All information supplied is to be used for general reference purposes only and is on the understanding that Electrolux Home Products Pty Ltd (Australia) and Electrolux (NZ) Ltd (New Zealand) will not be liable for any loss, liability or damage of whatever kind arising as a result of reliance on such information. Colours of products illustrated are as close as printing limitations allow. Electrolux will at all times comply with its obligations pursuant to law including Trade Practices (Australian Consumer Law) Act and Regulations.

WARRANTY

Electrolux Home Products warrants that for domestic applications the AEG appliances featured are free from defects in materials and workmanship for 5 years (3 months warranty for commercial applications). All warranties are subject to the conditions set out in the warranty card accompanying the product when purchased.

ELECTROLUX HOME PRODUCTS AUSTRALIA

telephone: 1300 363 664
fax: 1800 350 067
email: customercare@aegaustralia.com.au
web: www.aeg.com/au

ELECTROLUX HOME PRODUCTS NEW ZEALAND

telephone: 0800 10 66 10
fax: 09 573 2221
email: customercare@electrolux.co.nz
web: www.aeg.com/au