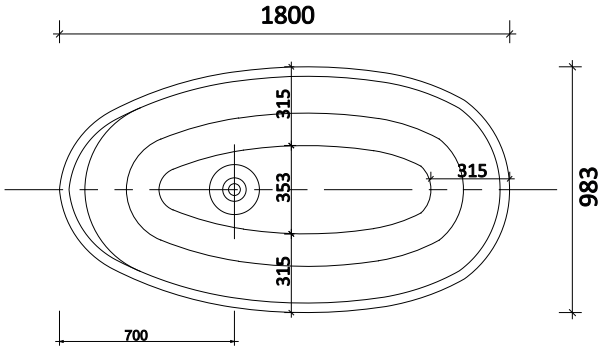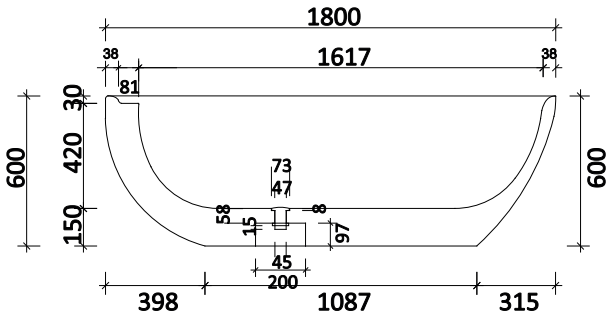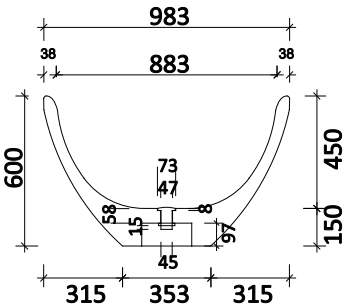Model	CALLA Stone Bath
Code	CALBH1800
Material	Bianco Carrara Marble, *Italy*
Finish	Honed
Width	980
Height	600
Length	1800