QUAD DOOR REFRIGERATOR FREEZER

INSTALLATION CONSIDERATIONS

Accessing your product specifications 4

Clearances 5

Electrical connection 6

Water connection 7

Water connection 8

QUAD DOOR REFRIGERATOR FREEZER

RF620QNTVX1, RF620QNTVD1, RF620QNPVX1, RF620QNPVB1, RF620QZPVG1

ACCESSING YOUR PRODUCT SPECIFICATIONS

For full product, cabinetry and service specifications, refer to the Planning Guide. To access the Planning Guide, scan the QR code or visit fisherpaykel.com/specify. Search by appliance type, product name or model code.

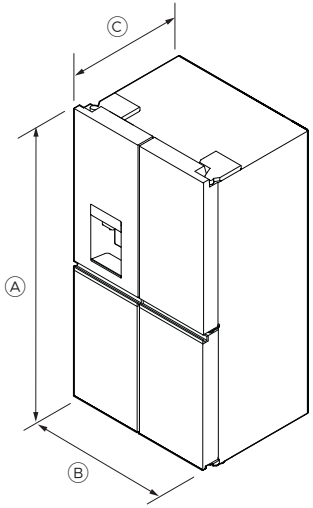

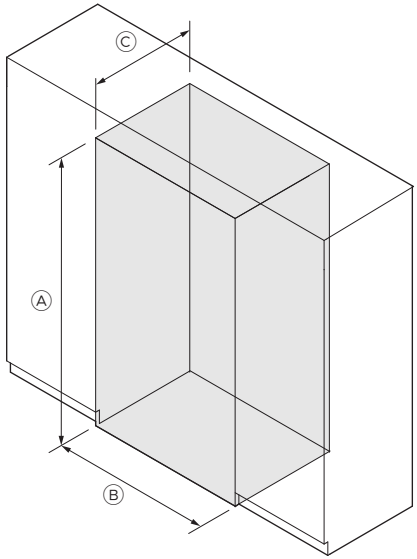

PRODUCT DIMENSIONS	mm
Ⓐ Overall height	1790
Ⓑ Overall width	905
Ⓒ Overall depth*	747

*excludes handle

CAVITY DIMENSIONS	FLUSH	PROUD
	mm	mm
Ⓐ Minimum inside height of cavity	1800	1800
Ⓑ Minimum inside width of cavity	1213	995
Ⓒ Minimum inside depth of cavity	778	660

CLEARANCES

For full product, cabinetry and service specifications, refer to the Planning Guide. To access the Planning Guide, scan the QR code or visit fisherpaykel.com/specify. Search by appliance type, product name or model code.

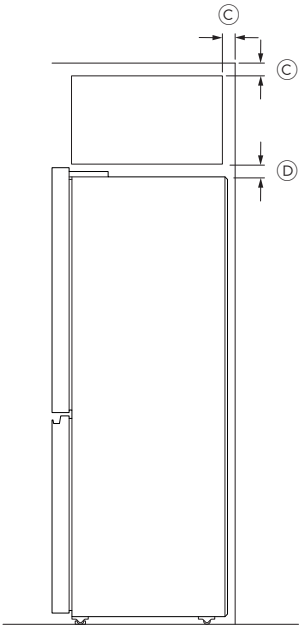

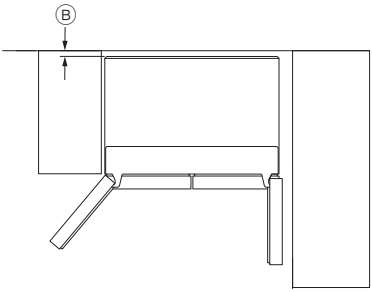

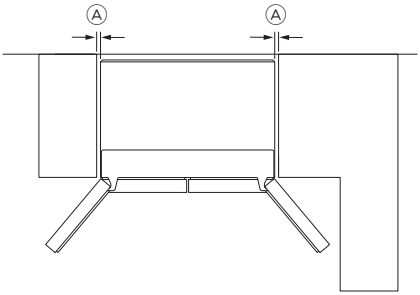

CLEARANCE DIMENSIONS	FLUSH FULL DOOR ROTATION	FLUSH 90° DOOR ROTATION	PROUD
	mm	mm	mm
Ⓐ Side clearance	154	76	45
Ⓑ Rear clearance (including rear compartment cover)	30	30	30
Ⓒ Vent (above refrigerator cabinet or around top of cupboard)	50	50	50
Ⓓ Top clearance (above refrigerator cabinet)	58	58	58

ELECTRICAL CONNECTION

SPECIFICATIONS	RF620Q MODELS
SERVICE (A)	10
SUPPLY (Hz)	50
VOLTAGE (V)	220 – 240V

Take care when connecting the water during installation. Correct installation helps prevent leaks or damage.

- Turn off the water supply before connecting the hose.
- Ensure all hoses and fittings are aligned and securely tightened.
- Ensure the hoses are not kinked, twisted or damaged.

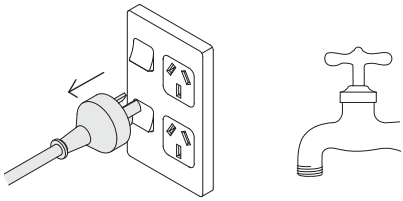

1. Ensure the refrigerator is not plugged into a power supply. Locate the isolation tap for cold water connection (tee and tap fitting not supplied) and the water filter kit.

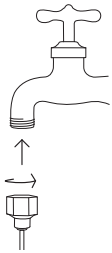

2. Fasten the tap adaptor with short tube to the isolation tap. Tighten by hand and tighten one additional turn with a spanner. Take care not to over tighten.

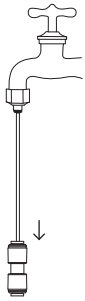

3. Insert the end of tap adaptor short tube into one end of the first hose connector as far as possible.

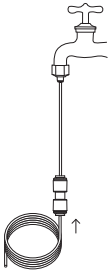

4. Insert one end of the water hose into the other end of hose connector as far as possible.

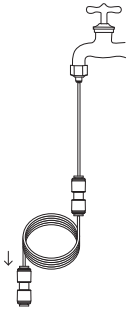

5. Insert the other end of the water hose into one end of the second hose connector as far as possible.

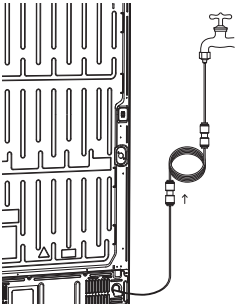

6. Connect the other end of the second hose connector to the hose attached to the back of the product.

Push the hose as far as possible into the connector.

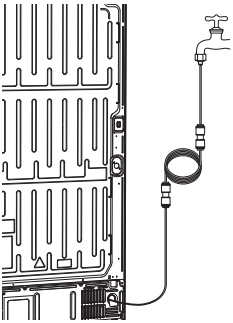

7. Check the connections, turn on the water supply and check for leaks.

FISHERPAYKEL.COM

© Fisher & Paykel Appliances 2026. All rights reserved.

The models shown in this guide may not be available in all markets and are subject to change at any time.

The product specifications in this guide apply to the specific products and models described at the date of issue. Under our policy of continuous product improvement, these specifications may change at any time.

For current details about model and specification availability in your country, please go to our website or contact your local Fisher & Paykel dealer.

433784A 04.26