Venice

VE804CR

Chrome Single Towel Rail 800mm

All dimensions in mm



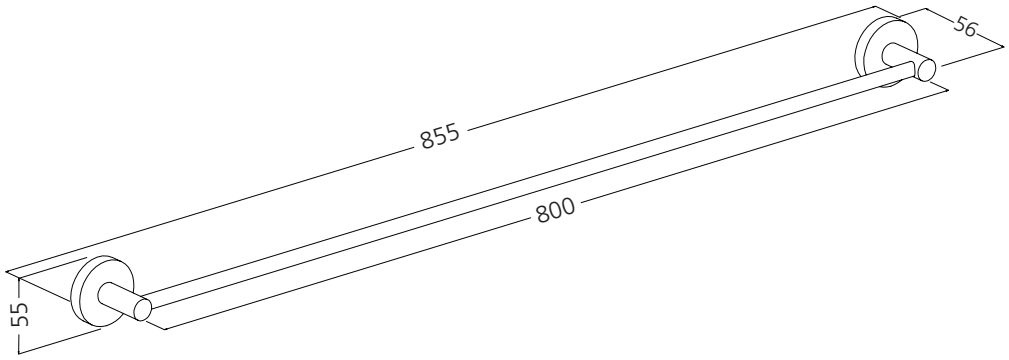

Specifications /

Materials	Zinc alloy, 304 stainless steel
Finish	Chrome (electroplated)
Mounting method	Wall mounting, two point fixing
Parts list	Towel rail, fixing set
Carton size	65 x 60 x 860 mm
Weight	0.34 kg
Warranty	7 years parts and finish, 1 year labour (see Oliveri website for full details)
Maintenance and care instructions	All surfaces should be cleaned with mild liquid detergent or soap and water. Do not use cream cleaners or citrus based cleaning products, as they are abrasive. Use of unsuitable cleaning agents may damage the surface. Any damage caused in this way will not be covered by warranty.

® Registered trademark of Oliveri Solutions. Under its policy of ongoing product development Oliveri Solutions may from time to time change product specification without notice. All dimensions given are approximate and should be checked prior to installation. See Oliveri website for installation and warranty details.

Revision date: 19-08-2026