627L Series 7 Quad Door Refrigerator Freezer, Autofill Pitchers, Dual Ice Makers

Contemporary

This Quad Door Refrigerator Freezer has everything within reach. Enjoy chilled, filtered water from two Autofill Pitchers or the internal dispenser, plus Cube and Pebble ice on demand from two independent ice makers in the freezer. Three independently controlled zones, including a Variable Temperature Zone, allow you to adapt storage conditions to different foods. With clean lines and recessed handles, it brings refined design, intelligent technology, and flexible food care together in one considered appliance.

- Two Autofill Pitchers in the door provide a total of 2.6L capacity, ideal for taking to the table or filling bottles
- Two independent automatic ice makers in the freezer produce Cube and Pebble ice
- Variable Temperature Zone with Fridge, Chill, Soft Freeze, and Gentle Freeze modes
- Connect with Wi-Fi and the SmartHQ™ app to receive notifications and guides

DIMENSIONS

Height	**1790 mm**
Width	**905 mm**
Depth	**747 mm**

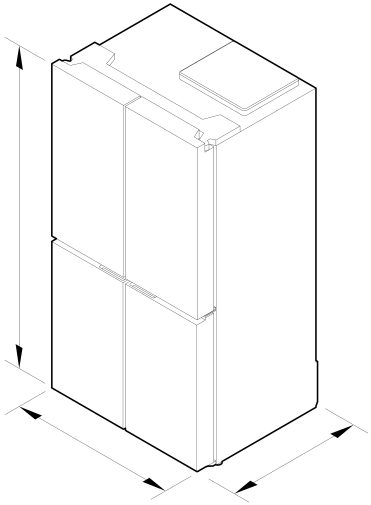

FEATURES & BENEFITS

Generous by Design

Ready for every occasion, the pinnacle of our Freestanding Quad Door collection combines generous capacity with considered functionality. Featuring two Autofill Pitchers, a slimline internal water dispenser, and a Dual Ice Maker, it is designed for everyday versatility. The Variable Temperature Zone can be adjusted to optimal storage conditions for different ingredients, keeping your kitchen ready for whatever the moment brings.

Your Perfect Pour

Chilled, filtered water - ready when you are. Two Autofill Pitchers stored in the door offer 2.6L total capacity, automatically replenished and perfect for taking to the table or filling bottles. An internal water dispenser also provides quick access to chilled water inside the refrigerator whenever you need it.

Ice for Every Occasion

From a quiet drink to hosting guests, different moments call for different ice. Cube ice holds its shape for a slower chill, while Pebble ice creates more surface area to cool drinks quickly and blend easily into cocktails. Two independently controlled ice makers adapt to your needs, producing either ice type on demand, while the flexibility to run a single ice maker or remove a bin creates more usable freezer space when required.

Optimal Cooling Climates

Shaped by the Mastery of Temperature, our Variable Temperature Zone with Fridge, Chill, Soft Freeze, and Gentle Freeze modes lets you create the optimal climate for perfect food care. The perfect balance of preservation and convenience, Soft Freeze mode allows you to store meat for longer than fresh while keeping it at the ideal temperature for slicing without defrosting, while Fridge mode can increase fresh food storage capacity by nearly 40%.

Extend Freshness With Humidity Control

Optimal humidity is fundamental to the preservation of fruits and vegetables. Our Humidity Control Bins with grooved lids are tested by our team of food scientists to maintain ideal humidity levels. Proven to store fruit and vegetables fresher for up to 10 times longer* than on the main shelf, preserving the flavour, nutrients and texture of your produce. *Based on internal testing, according to IEC 63169:2020/A1:2025.

Considered Design

In the heart of a busy kitchen, every detail is intentional. Recessed handles, a discreet internal user interface and clean, balanced proportions create a unified aesthetic - available in Black Stainless Steel, Silver Stainless Steel or Grey Glass to match our Contemporary or Minimal style appliances across a cohesive kitchen suite.

Engineered for Life

Refrigerators need to endure years of daily use. Designed for reliable performance, our models are life-tested beyond standard safety requirements, with each door shelf impact-tested over 70,000 times, equivalent to an estimated 20 years of real-life usage, to ensure lasting durability.

SPECIFICATIONS

Accessories (sold separately)

Matching Replacement Water Filter Model	**FPWF1 - 847200**

Capacity

Volume	**627 L**
Volume freezer	**137.5 L**
Volume refrigerator	**356.2 L**
Volume variable temperature compartment	**133.1 L**

Connected Features

Alerts and notifications	•
Consumable subscription	•
Cyber security updates until	**30 / 06 / 2031**
Education and onboarding	•

Consumption

Energy rating	**5 star**
Energy usage	**364kWh/y**

Features

Adjustable glass cantilevered shelves	•
Cantilevered glass shelves	**2**
Door alarm	•
Fruit and vegetable bins	**2**
LED ceiling lighting	•
Smart appliance	•

Freezer Features

Automatic ice maker	•
Bottle chill	•
Door alarm	•
Door shelves	**6**
Drawer alarm	•
Freezer bins	**2**
Ice bin and scoop	•
Ice Boost	•
LED bin lighting	•
Max Cold	•

Installation Dimensions

Minimum air clearance - on top	**404**

Performance

ActiveSmart™ Foodcare	•
Adaptive defrost	•
Dual evaporator	•
Frost free	•
Humidity control system	•
Inverter controlled compressor	•
Sabbath mode	•
Variable Temperature Compartment Performance	•

Product dimensions

Depth	**747 mm**
Height	**1790 mm**
Width	**905 mm**

Variable Temp Compartment

Bottle chill mode	•

SKU	27024

The product dimensions and specifications in this page apply to the specific product and model. Under our policy of continuous improvement, these dimensions and specifications may change at any time. You should therefore check with Fisher & Paykel's Customer Care Centre to ensure this page correctly describes the model currently available. © Fisher & Paykel Appliances Ltd 2020

A PEACE OF MIND SALE

24 Hours 7 Days a Week Customer Support

T 1300 650 590 **W**www.fisherpaykel.com

Other product downloads available at fisherpaykel.com

- 2D-DWG
- 2D-DXF
- Care & Maintenance (English)
- First Use (English)
- Installation Considerations (English)
- Installation Guide (English)
- Planning Guide (English)
- Revit21
- Rhino6
- Safety & Warnings (English)
- Sketchup8

Where applicable:

All appliances use energy, and energy usage typically generates carbon emissions. **Fisher & Paykel Appliances' In-use Energy Carbon Emissions Estimate** indicates carbon emissions from a product's in-use energy. This is calculated either annually or per cycle, using the product's market-specific energy label energy consumption data multiplied by the carbon emissions factor for energy in your country or region.

Our In-use Energy Carbon Emissions Estimate is designed to assist customers in making informed purchasing decisions when comparing different Fisher & Paykel products. For example, a heat pump dryer typically has a lower In-use Energy Carbon Emissions Estimate than a vented dryer.