QUAD DOOR REFRIGERATOR FREEZER INSTALLATION GUIDE

Components required	3
Accessing your product specifications	4
Clearances	5
Prior to installation	6
Unpack product	7
Move appliance	8
Connect services	9
Position and stabilise product	11
Flush water filter	12
Checklist	13

FISHER & PAYKEL

NZ AU UK IE SG

QUAD DOOR REFRIGERATOR FREEZER

RF620QNTVX1, RF620QNTVD1, RF620QNPVX1,
RF620QNPVB1, RF620QZPVG1

COMPONENTS REQUIRED

TOOLS

Supplied

- [ ] 17mm × 14mm spanner

PARTS

- [ ] Water filter (pre-installed)
- [ ] 4m Water hose
- [ ] Hose connectors (2)
- [ ] Brass tap adaptor with short tube
- [ ] Water pitchers
  - RF620QNPVX1, RF620QNPVB1, RF620QZPVG (2)
- [ ] Door shelf dividers
  - RF620QNTVX1, RF620QNTVD1 (3)
  - RF620QNPVX1, RF620QNPVB1, RF620QZPVG (5)

ACCESSING YOUR PRODUCT SPECIFICATIONS

For full product, cabinetry and service specifications, refer to the Planning Guide. To access the Planning Guide, scan the QR code or visit fisherpaykel.com/specify. Search by appliance type, product name or model code.

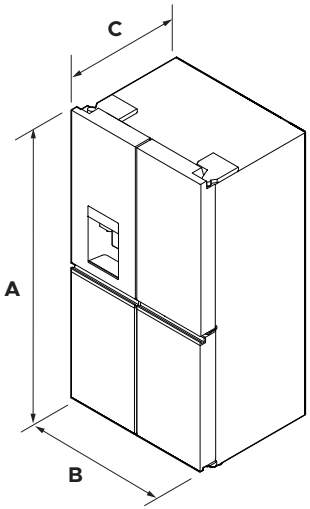

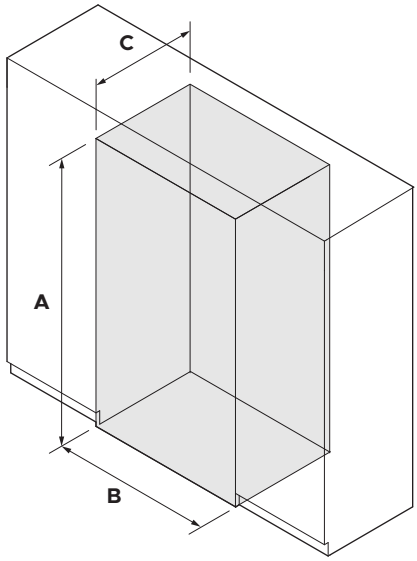

PRODUCT DIMENSIONS		mm
A	Overall height	1790
B	Overall width	905
C	Overall depth*	747

*excludes handle

CAVITY DIMENSIONS		FLUSH mm	PROUD mm
A	Minimum inside height of cavity	1800	1800
B	Minimum inside width of cavity	1213	995
C	Minimum inside depth of cavity	778	660

CLEARANCES

For full product, cabinetry and service specifications, refer to the Planning Guide. To access the Planning Guide, scan the QR code or visit fisherpaykel.com/specify. Search by appliance type, product name or model code.

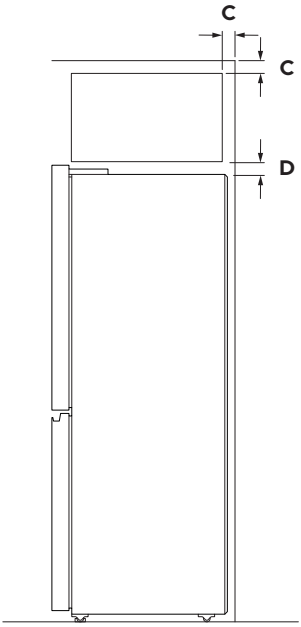

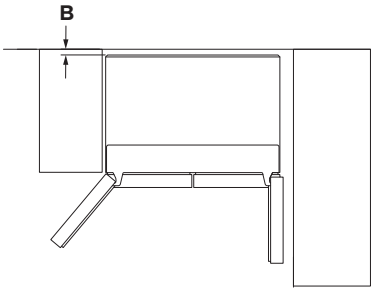

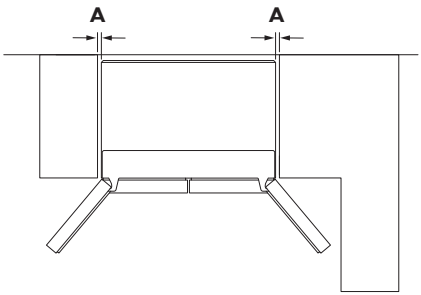

CLEARANCE DIMENSIONS	FLUSH FULL DOOR ROTATION	FLUSH 90° DOOR ROTATION	PROUD
	mm	mm	mm
A Side clearance	154	76	45
B Rear clearance (including rear compartment cover)	30	30	30
C Vent (above refrigerator cabinet or around top of cupboard)	50	50	50
D Top clearance (above refrigerator cabinet)	58	58	58

fisherpaykel.com/specify

1. Measure cavity dimensions.

Ensure minimum specifications have been met and clearances have been considered.

2. Ensure floor is level and clear and a finished return has been created if required.

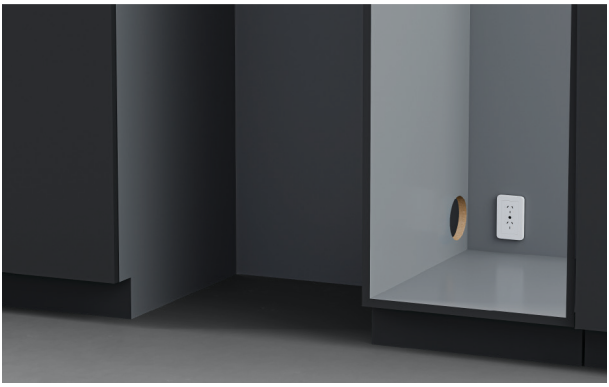

3. Ensure services are accessible and correctly installed.

If connections are located behind the appliance, an isolating switch is recommended.

1. Cut the straps and the line printed on the top of the carton.

Lift cardboard to remove.

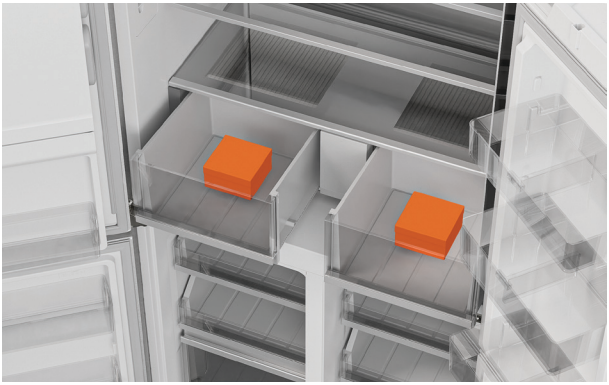

2. Remove installation kit from inside the appliance.

Remove autofill water pitchers from freezer drawer (internal dispenser models only).

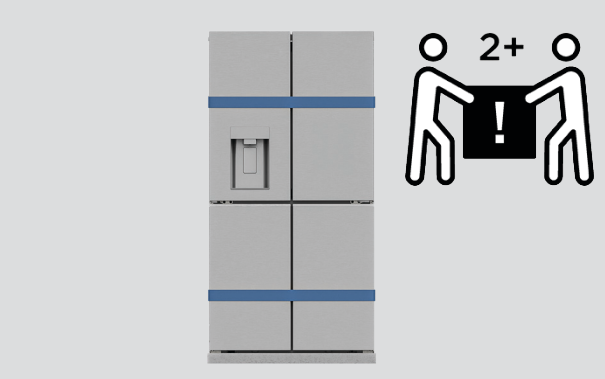

Two people required at all times

1. Take care when moving the appliance. Tape the door shut to prevent it opening.

The appliance has rollers and can be moved backwards and forwards. Avoid moving it sideways as this may damage the rollers or the floor.

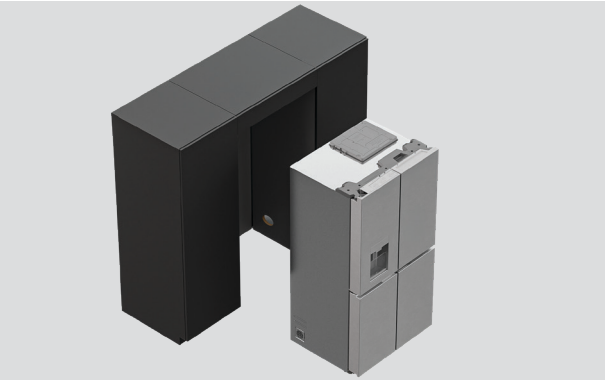

2. Position the appliance next to the cavity within reach of services.

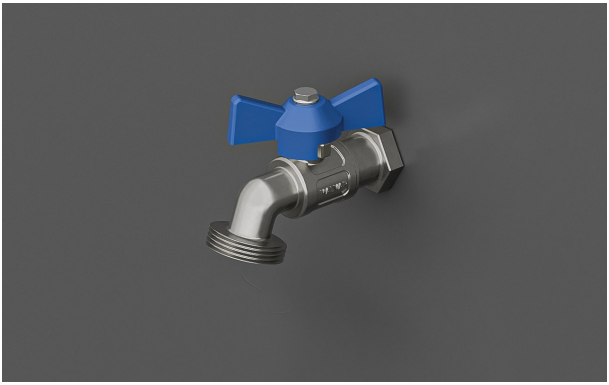

1. Ensure appliance is not connected to power supply.

Locate isolation tap for cold water connection and water filter kit.

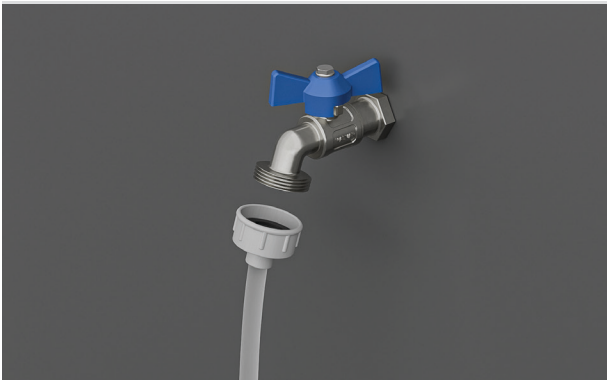

2. Fasten the tap adaptor with short tube to the isolation tap.

Tighten by hand, then tighten one additional turn with spanner.

Take care not to over tighten.

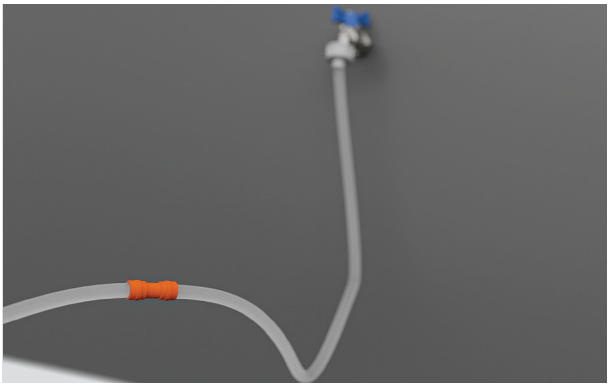

3. Insert short tube as far as possible into first hose connector. Insert 4m hose into other end of connector.

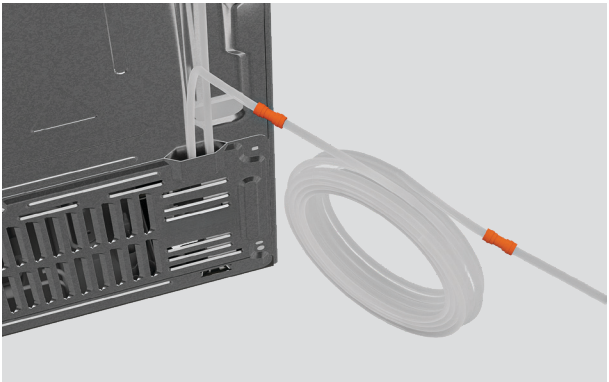

4. Attach second hose connector to the hose at the back of the product. Insert 4m hose as far as possible into second connector.

Turn on water supply and check for leaks.

5. Connect product to power outlet, and turn power on.

To reduce slack, wrap a thread around power cord.

- SERVICE (A) 10
- SUPPLY (Hz) 50
- VOLTAGE (V) 230

1. Roll appliance into final position.

Ensure there is the correct air gap between product and cabinetry and no cords or tubing are caught or pinched.

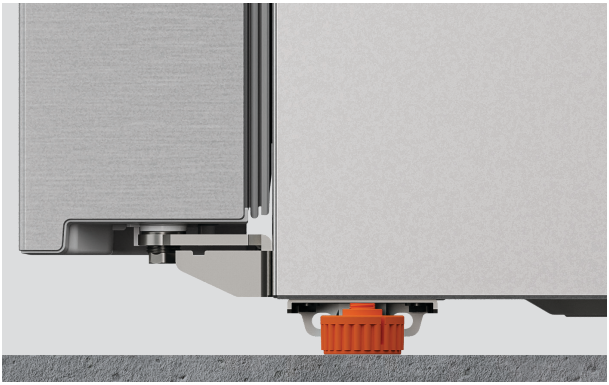

2. Turn the front feet clockwise until they make firm contact with the floor. This takes the load off the rollers and stabilises the product.

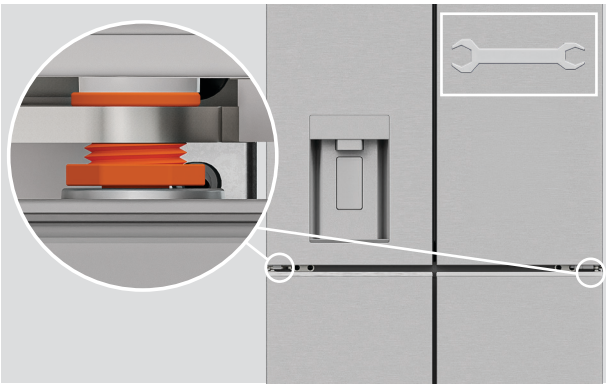

Levelling the doors (if required)

Use the supplied spanner to adjust the hinge nut at the bottom of each door.

1. Run 8 litres of water through the dispenser using the WATER option (not Bottle Fill).

There may be a delay before water dispenses and a time-out when dispensing a high volume of water.

2. Turn the ice maker on via the menu. The first full bins of ice should be discarded.

Access ice bin on external ice dispenser models

Open the upper left door, then open the hatch and remove the bin. Discard first full bin of ice.

CHECKLIST

Installation checks

- ☐ All clearances are correct.
- ☐ Front feet are bearing the product load, and the product does not roll forward.
- ☐ All external and internal packaging is removed.
- ☐ The isolating switch can be easily reached.
- ☐ The doors/drawer can open and close freely with no resistance from surrounding cabinetry.
- ☐ Appliance is plugged in and is cooling.

Test operation

- ☐ Flush the water filtration system.
- ☐ Start the ice maker.

Complete and keep for safe reference:

Model _____

Serial no. _____

Purchase date _____

Purchaser _____

Dealer address _____

Installer's name _____

Installer's signature _____

Installation company _____

Installation date _____

FISHERPAYKEL.COM

© Fisher & Paykel Appliances 2026. All rights reserved.

The models shown in this guide may not be available in all markets and are subject to change at any time.

The product specifications in this guide apply to the specific products and models described at the date of issue. Under our policy of continuous product improvement, these specifications may change at any time.

For current details about model and specification availability in your country, please go to our website or contact your local Fisher & Paykel dealer.

433339A 06.26